GND_TOP

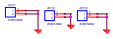

GND_BOT

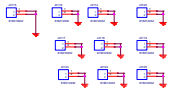

GND_5G_CH1

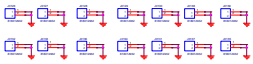

WIFI_5G_CH1

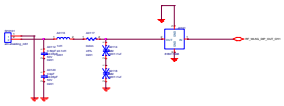

WIFI_2.4G_CH1

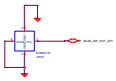

SAR SENSOR

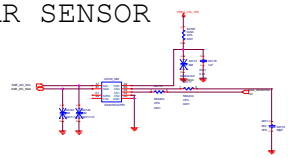

WIFI_5G_CH0+2.4G_CH0

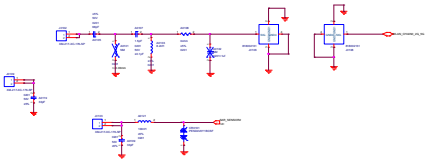

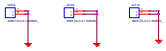

Place XO as close to PMX8002 as possible, away from heat source in all directions (including Z-direction for stacked PCB).
Route XTAL_IN and XTAL_OUT traces on surface layer only with length <10mm
No trace shall be present in at-least two immediate layers below XTAL.
Refer to 80-VP447-10 for XO Layout App Note

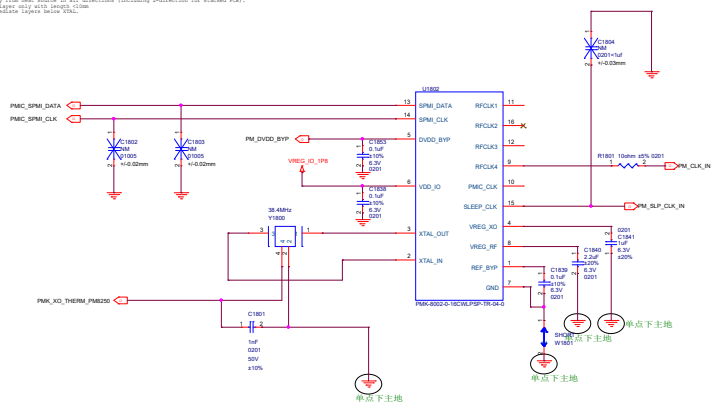

Title:	K31A_TEST_BOARD
Size: A2	Document Number: Reserved(for 5G-WTR I)
Date: Thursday, January 12, 2023	Sheet 19 of 77

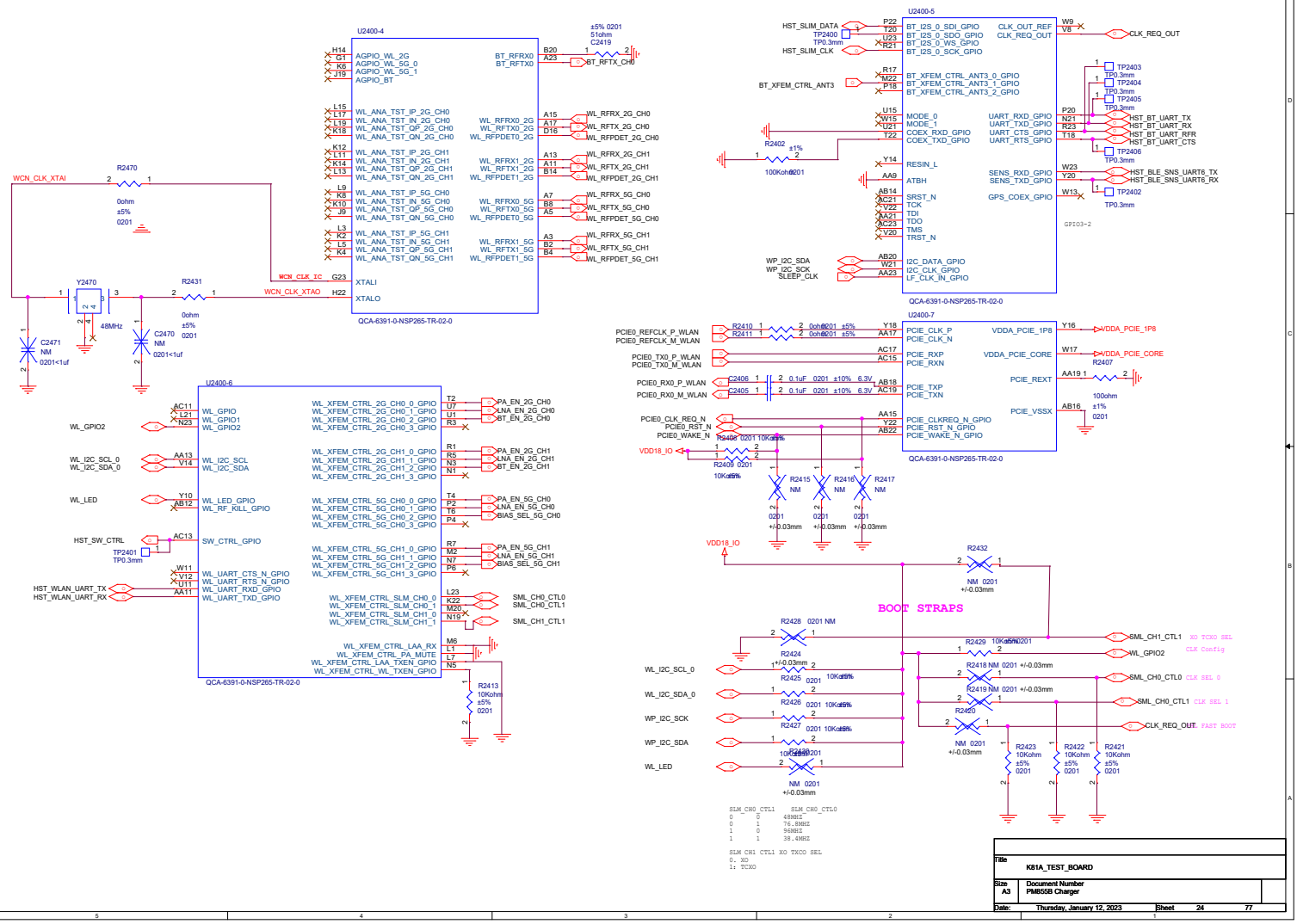
U2400-4
QCA-6391-0-NSP265-TR-02-0
AGPIO_WL_2G
AGPIO_WL_5G_0
AGPIO_WL_5G_1
AGPIO_BT
BT_RFRX0
BT_RFTX0
WL_ANA_TST_IP_2G_CH0
WL_ANA_TST_IN_2G_CH0
WL_ANA_TST_QP_2G_CH0
WL_ANA_TST_QN_2G_CH0
WL_ANA_TST_IP_2G_CH1
WL_ANA_TST_IN_2G_CH1
WL_ANA_TST_QP_2G_CH1
WL_ANA_TST_QN_2G_CH1
WL_ANA_TST_IP_5G_CH0
WL_ANA_TST_IN_5G_CH0
WL_ANA_TST_QP_5G_CH0
WL_ANA_TST_QN_5G_CH0
WL_ANA_TST_IP_5G_CH1
WL_ANA_TST_IN_5G_CH1
WL_ANA_TST_QP_5G_CH1
WL_ANA_TST_QN_5G_CH1
WL_RFRX0_2G
WL_RFTX0_2G
WL_RFPDET0_2G
WL_RFRX1_2G
WL_RFTX1_2G
WL_RFPDET1_2G
WL_RFRX0_5G
WL_RFTX0_5G
WL_RFPDET0_5G
WL_RFRX1_5G
WL_RFTX1_5G
WL_RFPDET1_5G
WL_RFRX_2G_CH0
WL_RFTX_2G_CH0
WL_RFPDET_2G_CH0
WL_RFRX_2G_CH1
WL_RFTX_2G_CH1
WL_RFPDET_2G_CH1
WL_RFRX_5G_CH0
WL_RFTX_5G_CH0
WL_RFPDET_5G_CH0
WL_RFRX_5G_CH1
WL_RFTX_5G_CH1
WL_RFPDET_5G_CH1
BT_RFTX_CH0
±5% 0201
51ohm
C2419
WCN_CLK_XTAI
R2470
0ohm
±5%
0201
WCN_CLK_XTAO
WCN_CLK_TC
XTALI
XTALO
Y2470
48MHz
R2431
C2471
NM
0201<1uf
C2470
U2400-5
BT_I2S_0_SDI_GPIO
BT_I2S_0_SDO_GPIO
BT_I2S_0_WS_GPIO
BT_I2S_0_SCK_GPIO
CLK_OUT_REF
CLK_REQ_OUT
HST_SLIM_DATA
HST_SLIM_CLK
TP2400
TP0.3mm
BT_XFEM_CTRL_ANT3
BT_XFEM_CTRL_ANT3_0_GPIO
BT_XFEM_CTRL_ANT3_1_GPIO
BT_XFEM_CTRL_ANT3_2_GPIO
MODE_0
MODE_1
COEX_RXD_GPIO
COEX_TXD_GPIO
UART_RXD_GPIO
UART_TXD_GPIO
UART_CTS_GPIO
UART_RTS_GPIO
HST_BT_UART_TX
HST_BT_UART_RX
HST_BT_UART_RFR
HST_BT_UART_CTS
RESIN_L
ATBH
SENS_RXD_GPIO
SENS_TXD_GPIO
HST_BLE_SNS_UART6_TX
HST_BLE_SNS_UART6_RX
SRST_N
TCK
TDI
TDO
TMS
TRST_N
GPS_COEX_GPIO
WP_I2C_SDA
WP_I2C_SCK
SLEEP_CLK
I2C_DATA_GPIO
I2C_CLK_GPIO
LF_CLK_IN_GPIO
R2402
100Kohm
U2400-7
PCIE_CLK_P
PCIE_CLK_N
PCIE_RXP
PCIE_RXN
PCIE_TXP
PCIE_TXN
PCIE_CLKREQ_N_GPIO
PCIE_RST_N_GPIO
PCIE_WAKE_N_GPIO
VDDA_PCIE_1P8
VDDA_PCIE_CORE
PCIE_REXT
PCIE_VSSX
PCIE0_REFCLK_P_WLAN
PCIE0_REFCLK_M_WLAN
PCIE0_TX0_P_WLAN
PCIE0_TX0_M_WLAN
PCIE0_RX0_P_WLAN
PCIE0_RX0_M_WLAN
PCIE0_CLK_REQ_N
PCIE0_RST_N
PCIE0_WAKE_N
VDD18_IO
R2415
R2416
R2417
NM
U2400-6
QCA-6391-0-NSP265-TR-02-0
WL_GPIO
WL_GPIO1
WL_GPIO2
WL_I2C_SCL
WL_I2C_SDA
WL_LED_GPIO
WL_RF_KILL_GPIO
SW_CTRL_GPIO
WL_UART_CTS_N_GPIO
WL_UART_RTS_N_GPIO
WL_UART_RXD_GPIO
WL_UART_TXD_GPIO
WL_XFEM_CTRL_2G_CH0_0_GPIO
WL_XFEM_CTRL_2G_CH0_1_GPIO
WL_XFEM_CTRL_2G_CH0_2_GPIO
WL_XFEM_CTRL_2G_CH0_3_GPIO
WL_XFEM_CTRL_2G_CH1_0_GPIO
WL_XFEM_CTRL_2G_CH1_1_GPIO
WL_XFEM_CTRL_2G_CH1_2_GPIO
WL_XFEM_CTRL_2G_CH1_3_GPIO
WL_XFEM_CTRL_5G_CH0_0_GPIO
WL_XFEM_CTRL_5G_CH0_1_GPIO
WL_XFEM_CTRL_5G_CH0_2_GPIO
WL_XFEM_CTRL_5G_CH0_3_GPIO
WL_XFEM_CTRL_5G_CH1_0_GPIO
WL_XFEM_CTRL_5G_CH1_1_GPIO
WL_XFEM_CTRL_5G_CH1_2_GPIO
WL_XFEM_CTRL_5G_CH1_3_GPIO
WL_XFEM_CTRL_SLM_CH0_0
WL_XFEM_CTRL_SLM_CH0_1
WL_XFEM_CTRL_SLM_CH1_0
WL_XFEM_CTRL_SLM_CH1_1
WL_XFEM_CTRL_PA_MUTE
WL_XFEM_CTRL_LAA_TXEN_GPIO
WL_XFEM_CTRL_WL_TXEN_GPIO
PA_EN_2G_CH0
LNA_EN_2G_CH0
BT_EN_2G_CH0
PA_EN_2G_CH1
LNA_EN_2G_CH1
BT_EN_2G_CH1
PA_EN_5G_CH0
LNA_EN_5G_CH0
BIAS_SEL_5G_CH0
PA_EN_5G_CH1
LNA_EN_5G_CH1
BIAS_SEL_5G_CH1
SML_CH0_CTL0
SML_CH0_CTL1
SML_CH1_CTL1
WL_GPIO2
WL_I2C_SCL_0
WL_I2C_SDA_0
WL_LED
HST_SW_CTRL
TP2401
HST_WLAN_UART_TX
HST_WLAN_UART_RX
R2413
10Kohm
±5%
0201
BOOT STRAPS
R2428
R2424
R2425
R2426
R2427
R2429
R2418
R2419
R2420
R2423
R2422
R2421
10Kohm
±5%
0201
NM 0201
+/-0.03mm
R2432
XO TCXO SEL
CLK Config
CLK SEL 0
CLK SEL 1
FAST BOOT
SLM_CH0_CTL1 SLM_CH0_CTL0
0 0 48MHZ
0 1 76.8MHZ
1 0 96MHZ
1 1 38.4MHZ
SLM_CH1_CTL1 XO TXCO SEL
0: XO
1: TCXO
Title
K81A_TEST_BOARD
Size
A3
Document Number
PM855B Charger
Date:
Thursday, January 12, 2023
Sheet
24
77

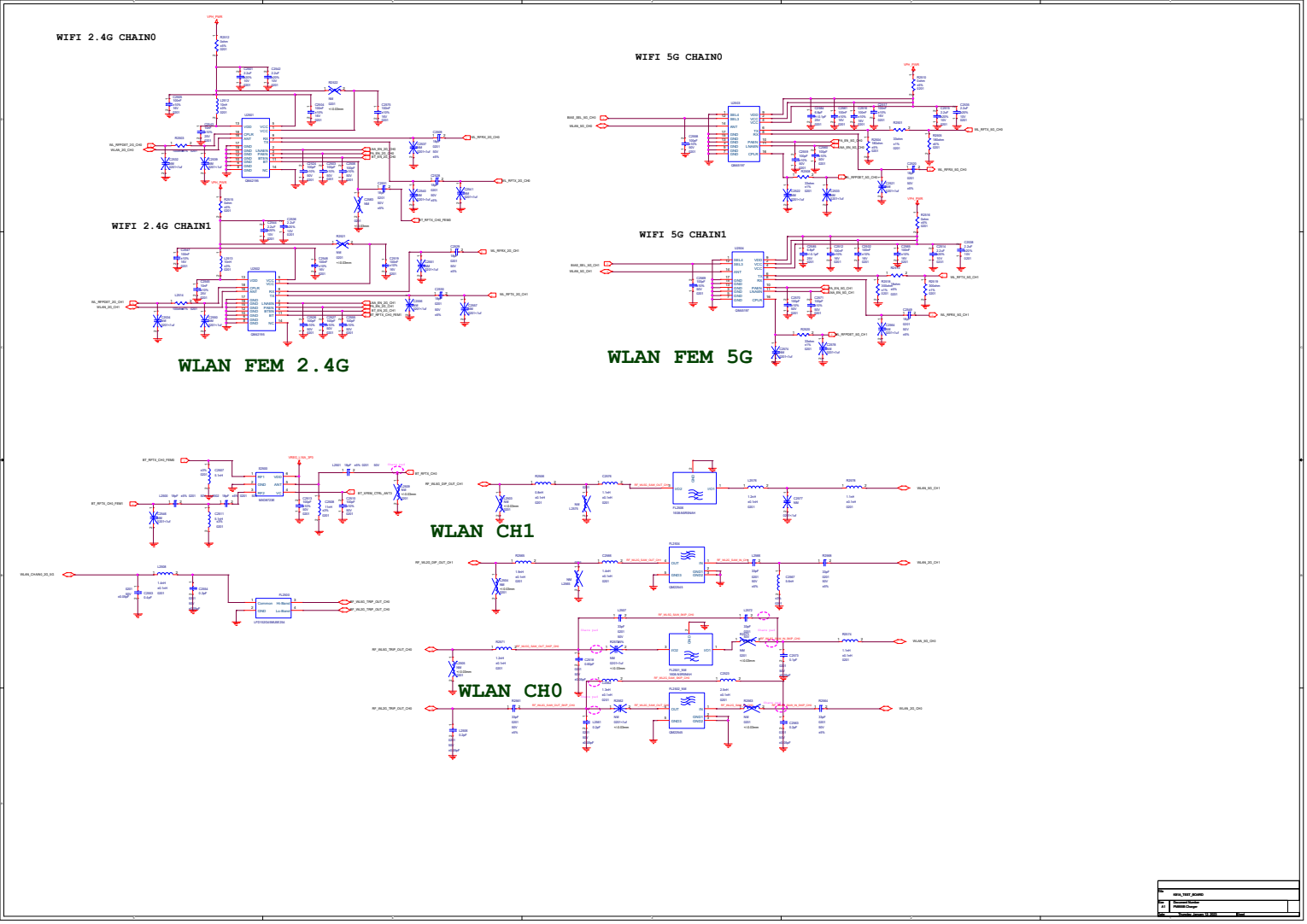

Title	WIFI_TEST_BOARD
Size	A3
Document Number	P5000Charger
Date: Monday, January 14, 2013	Sheet

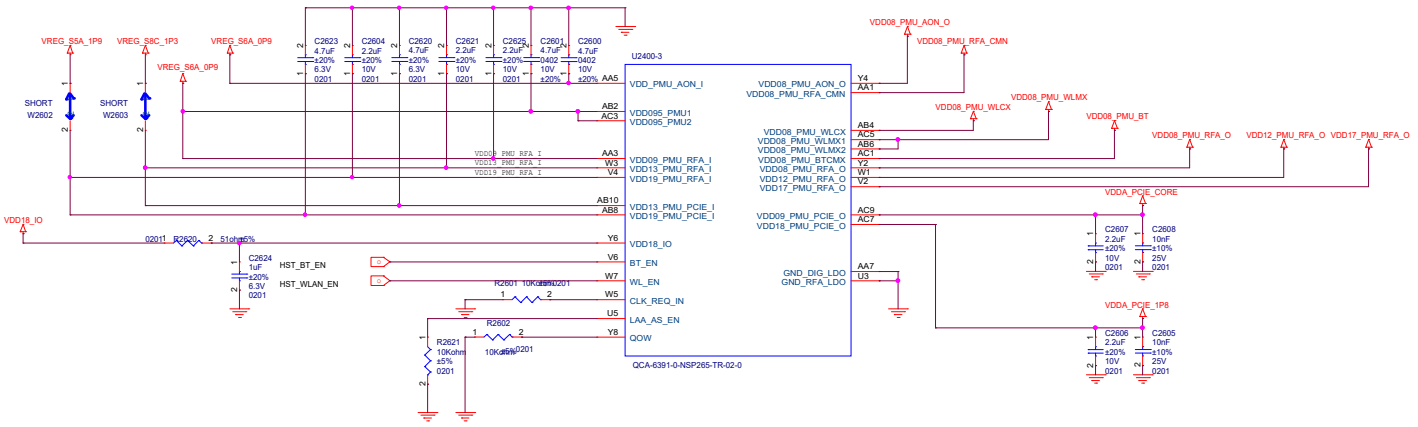

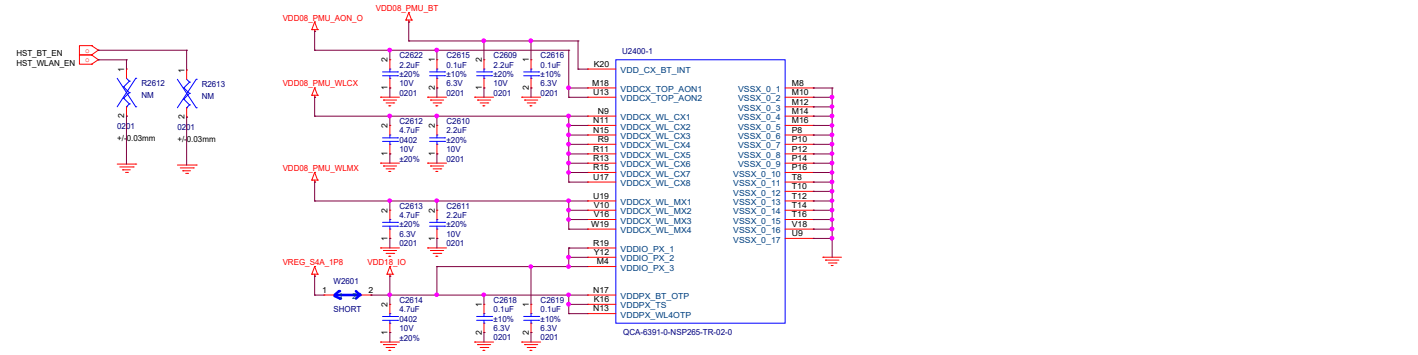

Title	K81A_TEST_BOARD
Size A3	Document Number PM855B Charger
Date: Thursday, January 12, 2023	Sheet

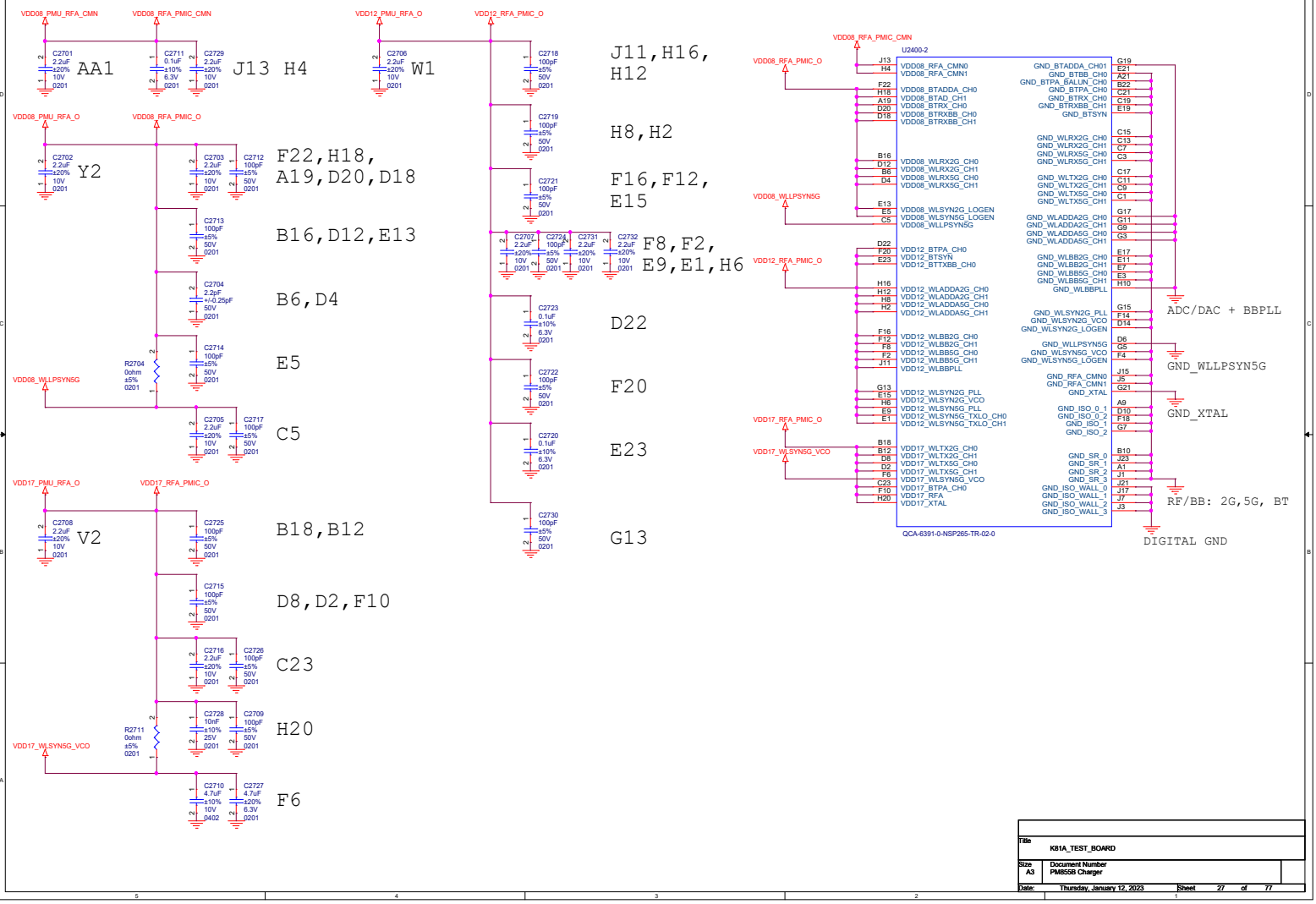

Title	K81A_TEST_BOARD
Size A3	Document Number PM855B Charger
Date: Thursday, January 12, 2023	Sheet 27 of 77

We use current SM8250 symbol as LP5 PKG, and it can be compatible with LP4x PKG

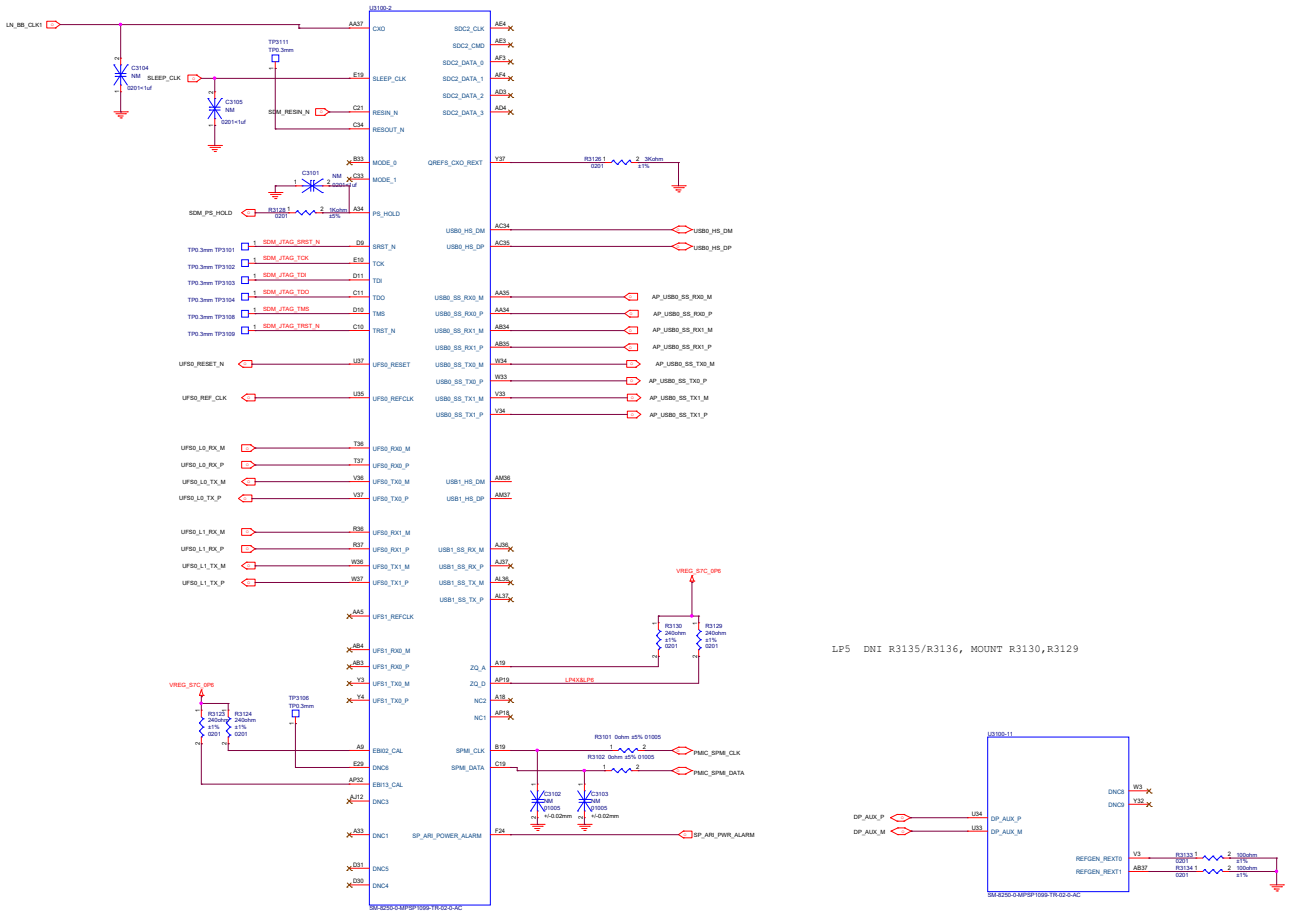

Title	K81A_TEST_BOARD
Size A2	Document Number SDM855 Control
Date: Thursday, January 12, 2023	Sheet

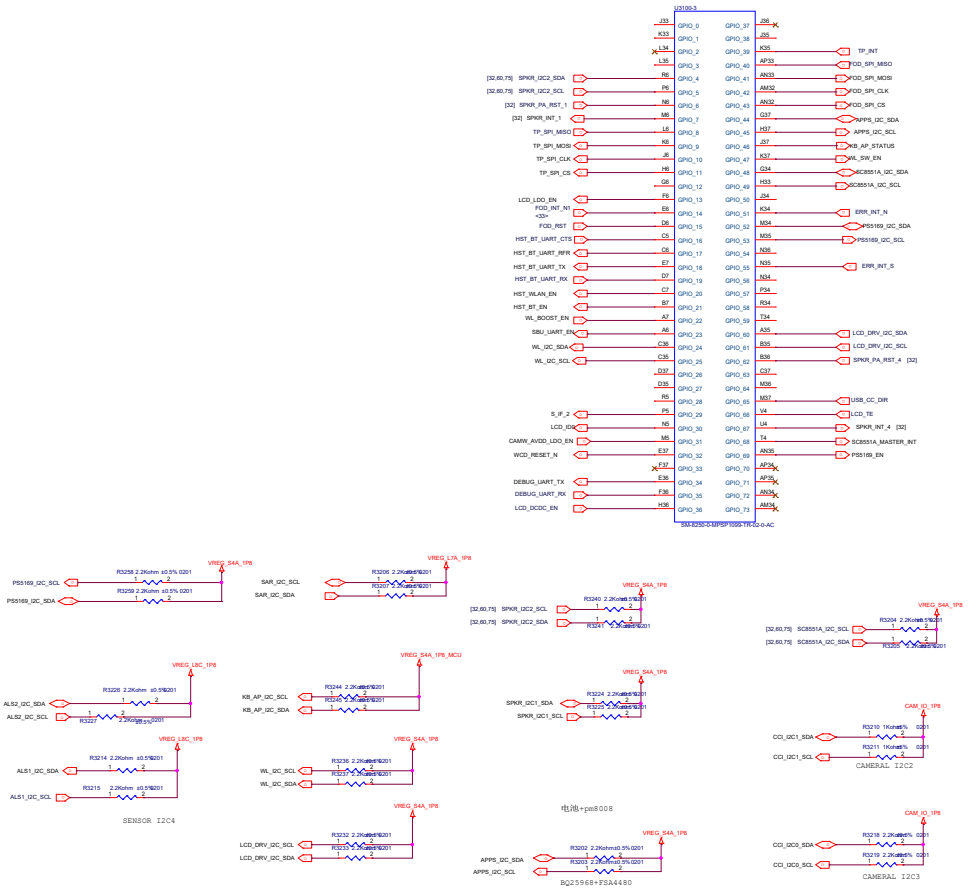

Title	K81A_TEST_BOARD
Size A2	Document Number SDM855 GPIO-1
Date: Thursday, January 12, 2023	Sheet 33 of 77

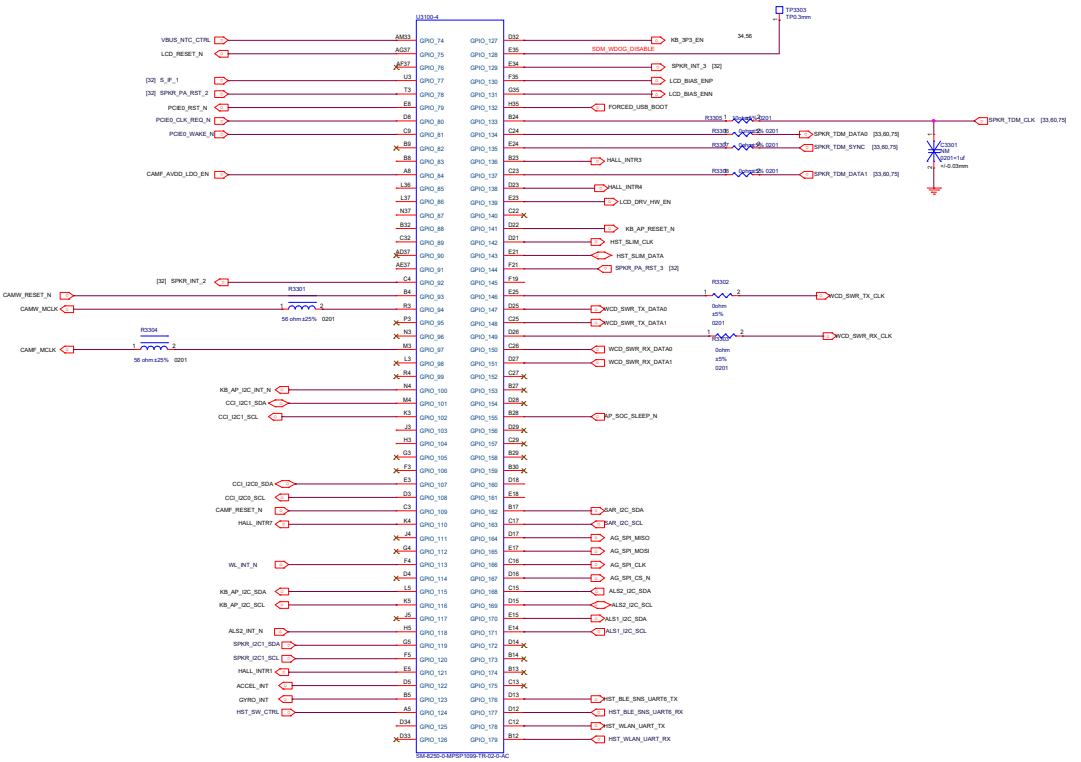

Title	K81A_TEST_BOARD
Size A2	Document Number SDM850 GPIO-2
Date: Thursday, January 12, 2023	Sheet

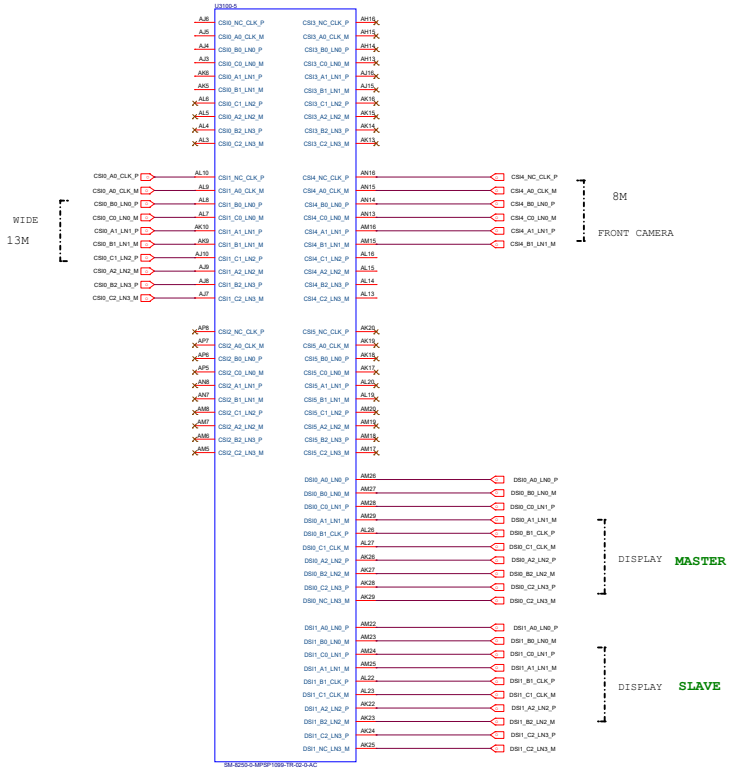

Title	K81A_TEST_BOARD
Size A2	Document Number SDM850-MPI
Date: Thursday, January 12, 2023	Sheet

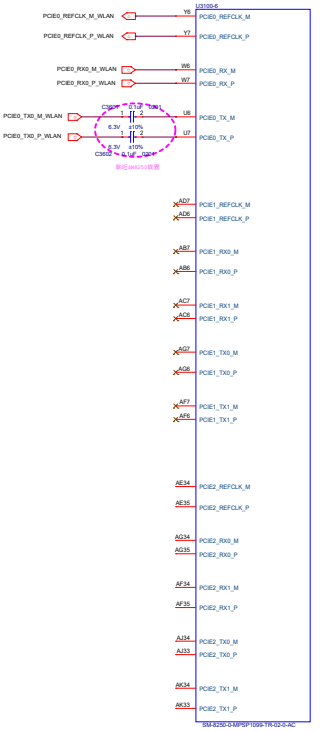

Title	K81A_TEST_BOARD
Size	Document Number
A2	SDM855 RF INTF
Date:	Thursday, January 12, 2023
Sheet	

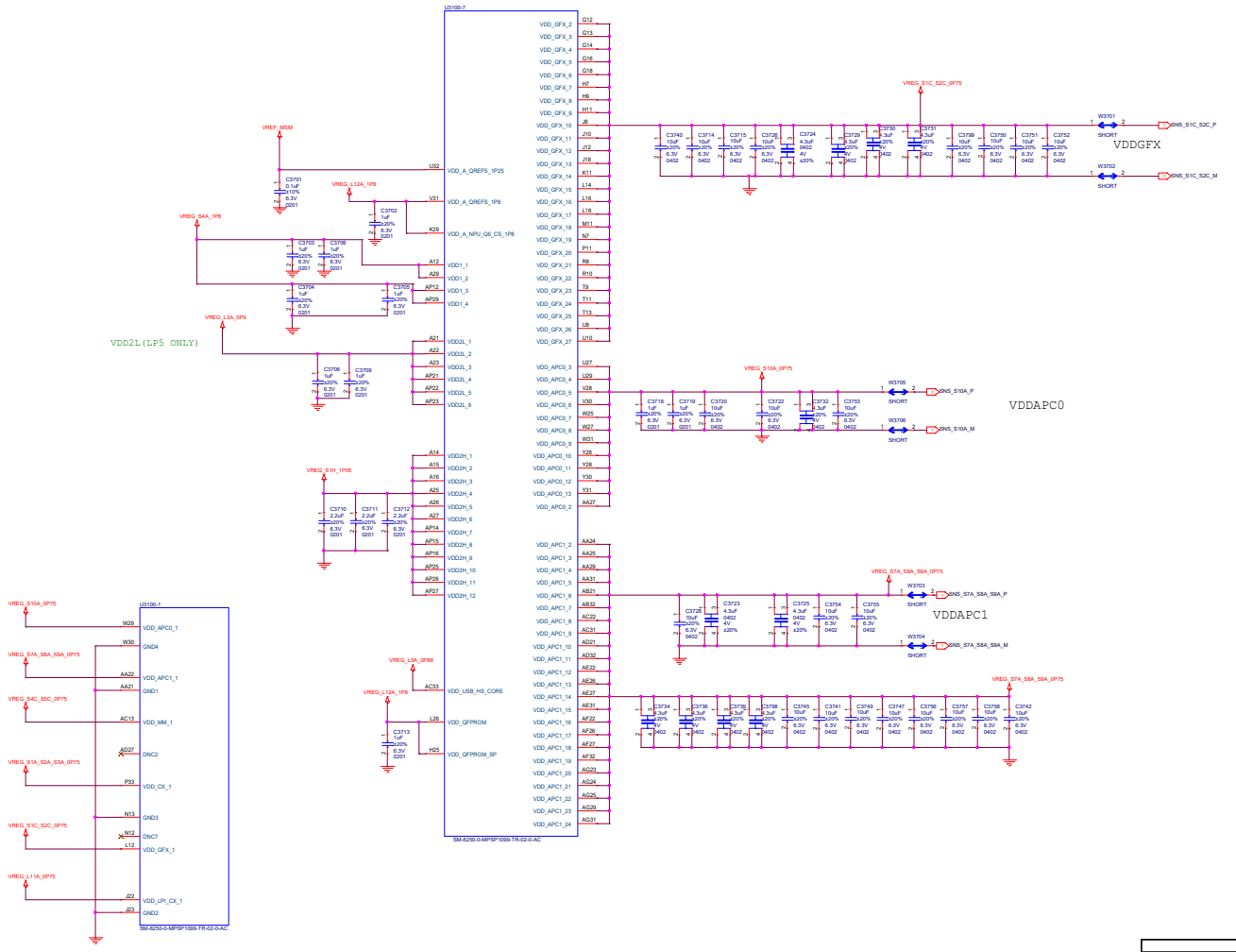

Title	K81A_TEST_BOARD
Size A2	Document Number SDM850-PWR1
Date: Thursday, January 12, 2023	Sheet 38 of 77

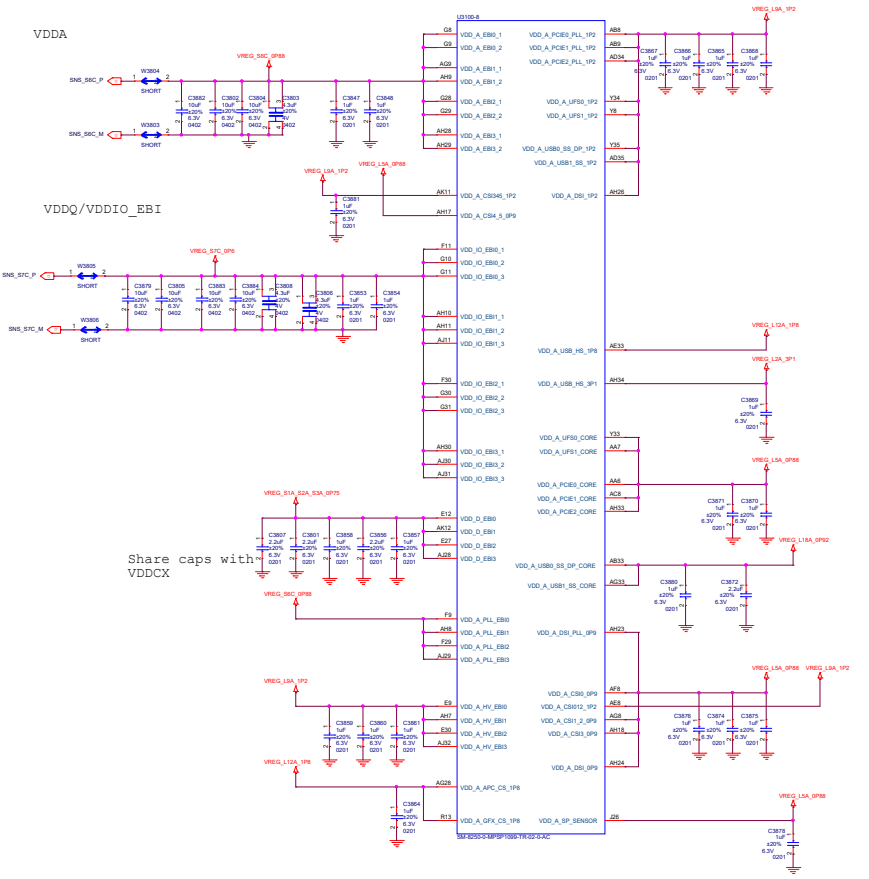

Title	K81A_TEST_BOARD
Size A2	Document Number SDM850-PWR2
Date: Thursday, January 12, 2023	Sheet

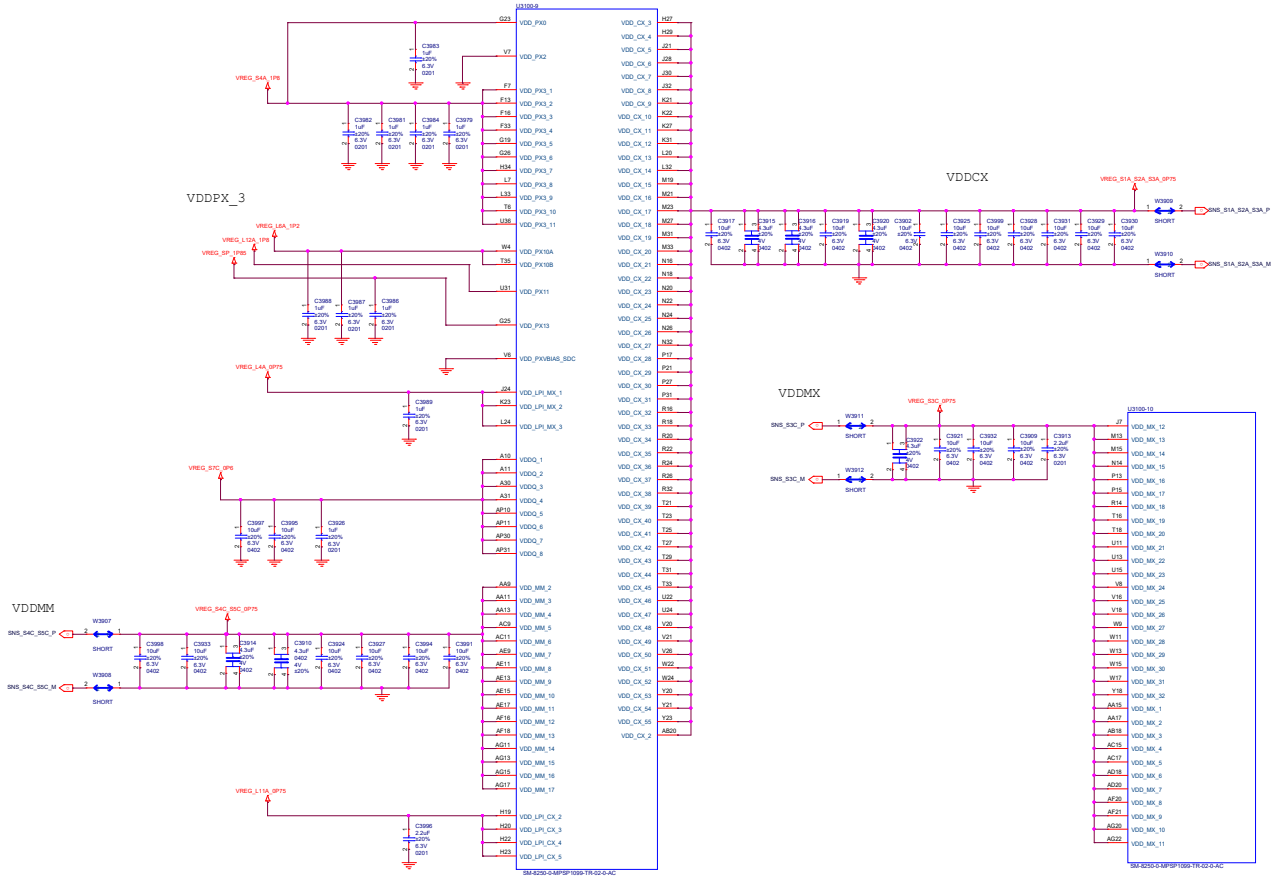

Title	K81A_TEST_BOARD
Size A2	Document Number SDM850-PWR3
Date: Thursday, January 12, 2023	Sheet 40 of 77

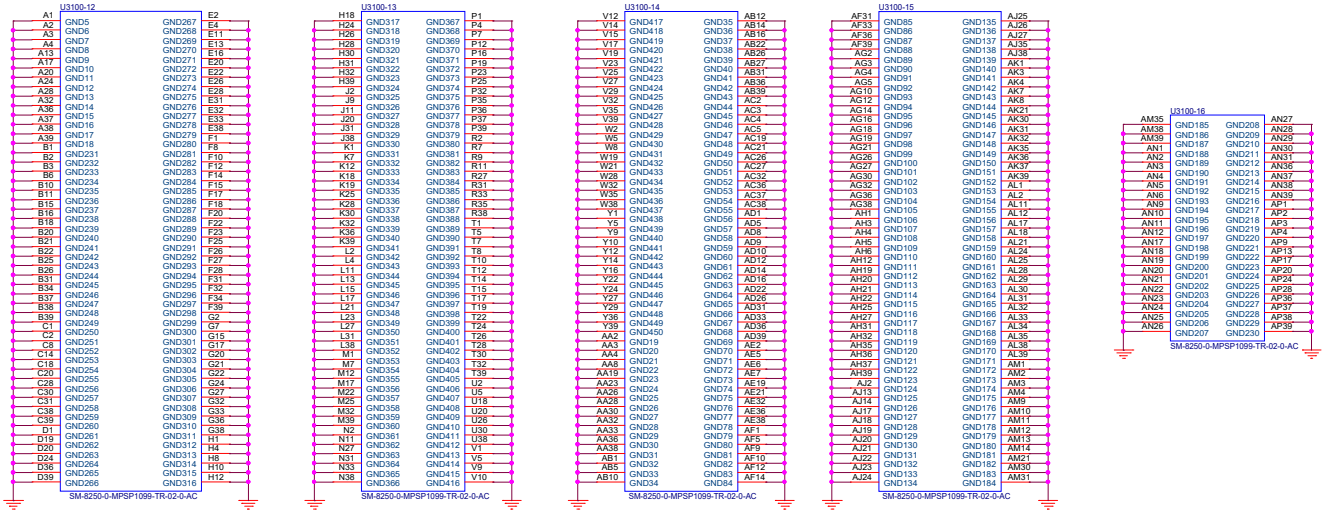

Title	K81A_TEST_BOARD
Size A3	Document Number SDM855 GND
Date: Thursday, January 12, 2023	Sheet 42 77

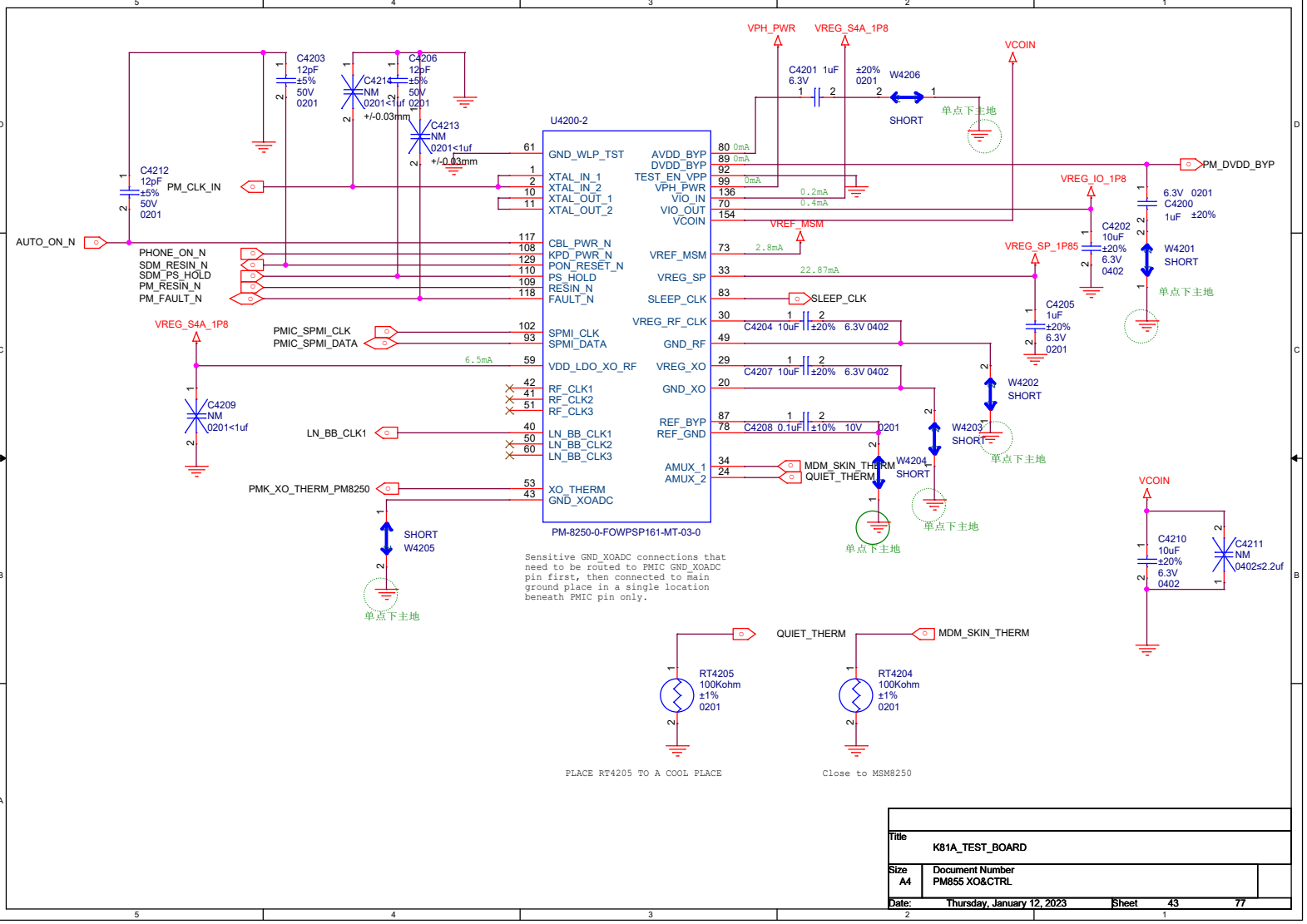

Title	K81A_TEST_BOARD
Size A4	Document Number PM855 XO&CTRL
Date: Thursday, January 12, 2023	Sheet 43 77

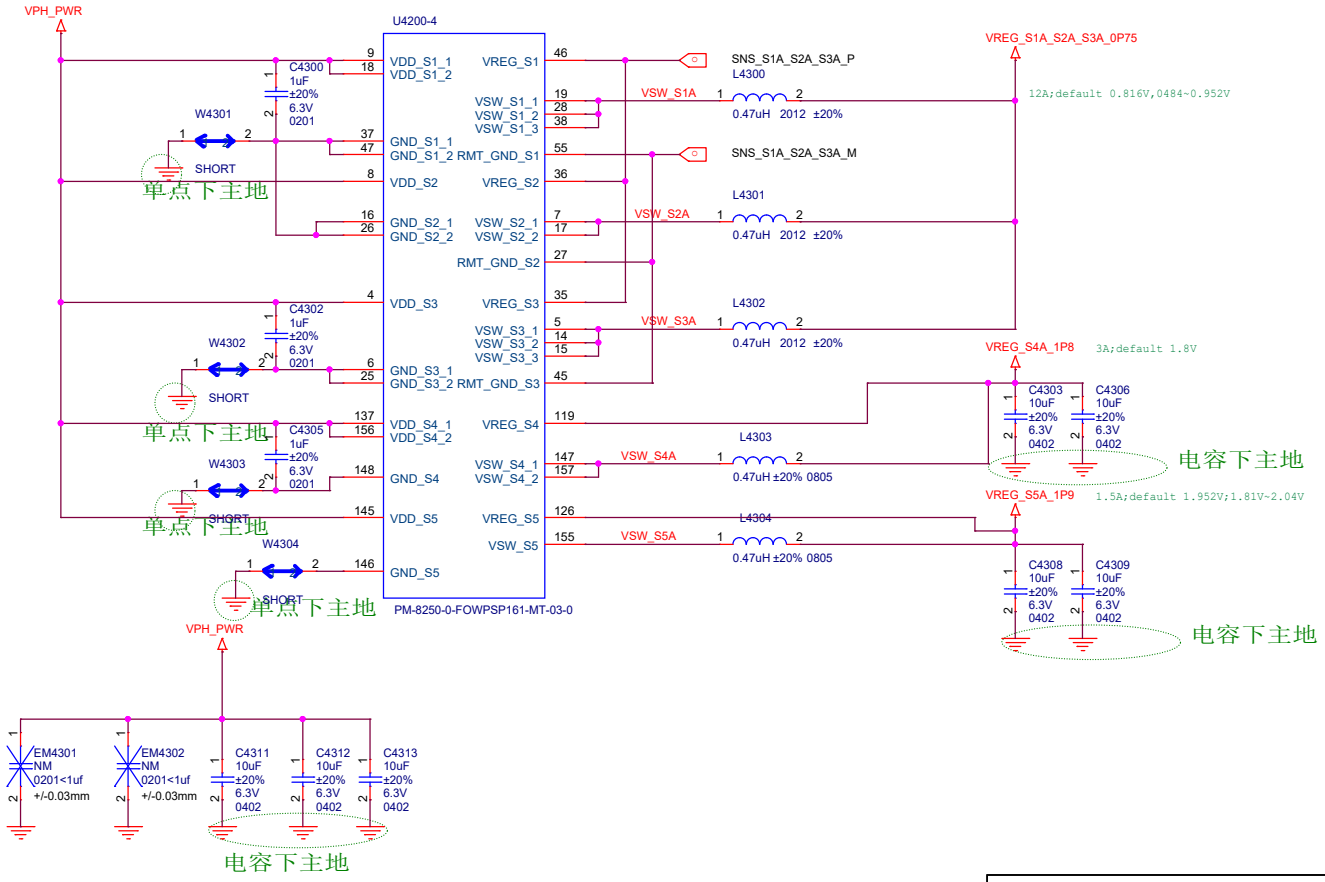

Title	K81A_TEST_BOARD
Size A4	Document Number PM855 BUCK CONVERTER1
Date: Thursday, January 12, 2023	Sheet 44

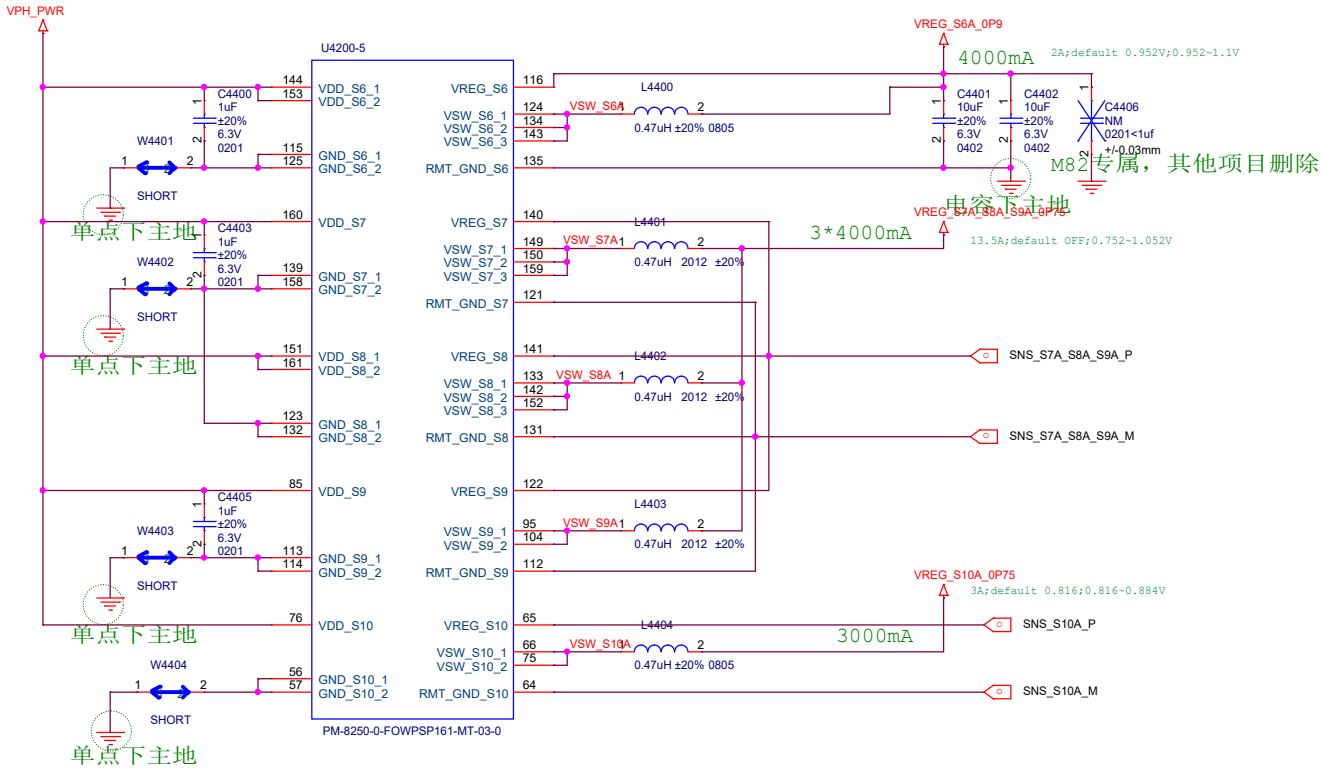

Title	K81A_TEST_BOARD		
Size A4	Document Number PM855 BUCK CONVERTER2		
Date: Thursday, January 12, 2023	Sheet 45	77	

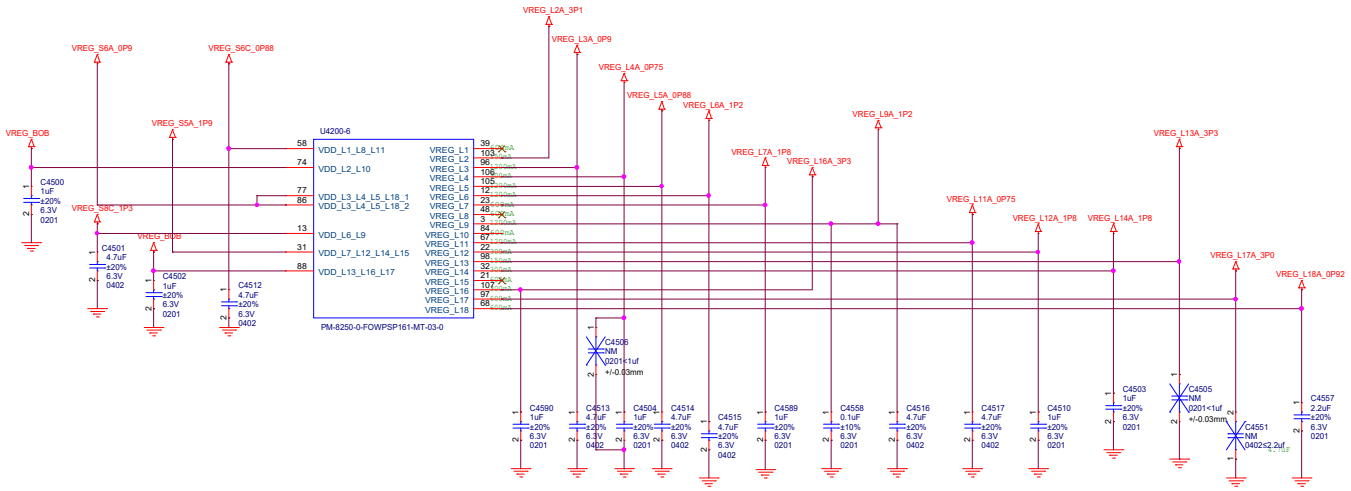

Table 3-9 PM8250 linear/low-voltage regulator summary

Regulator	Circuit type	I_{RATED} (mA) [1]	Default on booting voltage (V) [2]	Nominal voltage (V)	Active voltage minimum (V)	Active voltage maximum (V)	Expected use
L1A	LDO510 NMOS 600	600	–	0.752			Spare
L2A	LDO510 MV PMOS 150	150	3.072	3.072	3.072	3.072	USB
L3A	LDO510 NMOS 1200	1200	0.928	0.928			LPDDR5: VDD2L LPDDR4X: Spare
L4A	LDO510 NMOS 300	300	0.816	0.816	0.752	0.904	LPI_MX
L5A	LDO510 NMOS 1200	1200	0.88	0.88	0.88	0.88	LPI_MX
L6A	LDO510 NMOS 1200	1200	1.2	1.2	1.2	1.2	UFS VCCQ, PX_10
L7A	LDO510 LV PMOS 600	600	–	1.704			QCA6390 VDDRFA backup
L8A	LDO510 NMOS 600	600	–	0.816			Spare
L9A	LDO510 NMOS 1200	1200	1.2	1.2	1.2	1.2	1.2V VDDA for DSI, PCIE, HV EBI, USB_SS_DP_1P2, CSI, and so on.

Table 3-9 PM8250 linear/low-voltage regulator summary (cont.)

Regulator	Circuit type	I_{RATED} (mA) [1]	Default on booting voltage (V) [2]	Nominal voltage (V)	Active voltage minimum (V)	Active voltage maximum (V)	Expected use
L10A	LDO510 MV PMOS 600	600	–	2.904			Optional DMIC Bias
L11A	LDO510 NMOS 1200	1200	0.816	0.816			LPI_CX
L12A	LDO510 LV P300	300	1.8	1.8	1.8	1.8	BBCLK, USB, UFS, QFPROM
L13A	LDO510 MV P150	150	–	3.008			FTM TSP_AVDD
L14A	LDO510 LV P300	300	–	1.8	1.8	1.8	OLED_VDDIO
L15A	LDO510 LV P600	600	–	1.704	1.704	1.704	QCA6436 VCC_1P8
L16A	LDO510 MV P300	300	–	3.024			Ext BT xPA 3p3
L17A	LDO510 MV P600	600 [3]	2.96	2.96	2.856	3.008	UFS_2L_VCC
L18A	LDO510 N600	600	0.912	0.912			USB SS core & DP core

1. Some regulators are tested and used beyond their Irated limit
2. Voltages shown in the *Default on booting voltage (V)* column indicate that the regulator is enabled as part of the hardware default-on sequence.
3. VREG_L17A has been specifically validated up to 800 mA for UFS VSS support.

Title	K81A_TEST_BOARD
Size A3	Document Number PM855 LDOs
Date: Thursday, January 12, 2023	Sheet 46 77

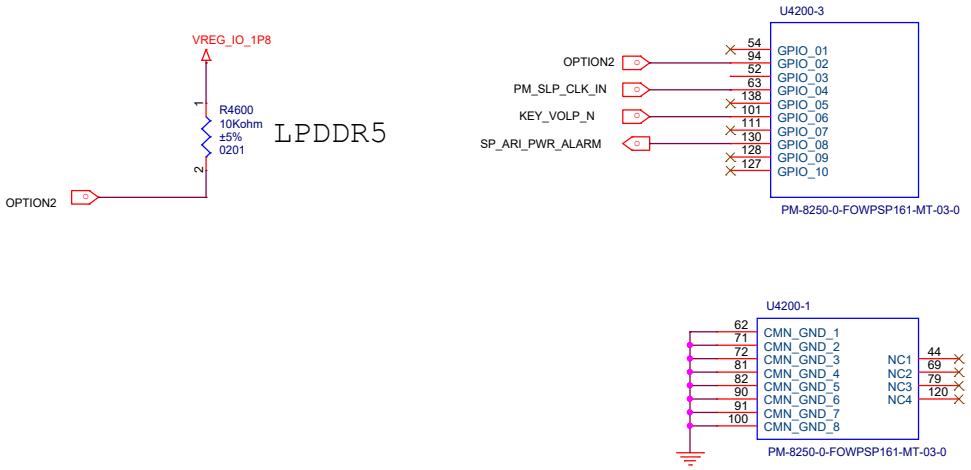

Title	K81A_TEST_BOARD
Size A4	Document Number PM855 GPIO&GND
Date: Thursday, January 12, 2023	Sheet 47 of 77

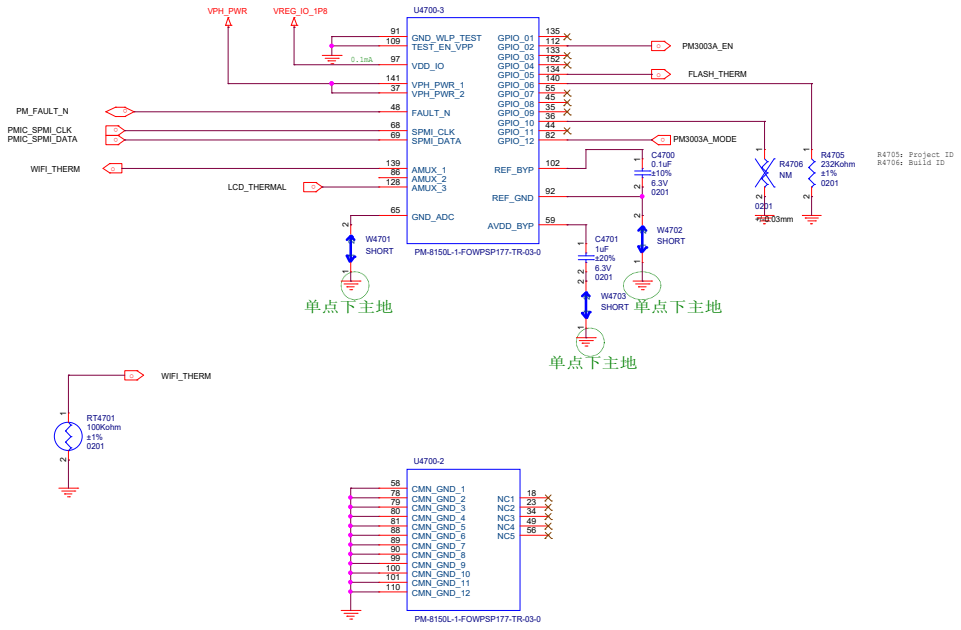

Title	K81A_TEST_BOARD		
Size A3	Document Number PM855A CTRL&GND		
Date: Thursday, January 12, 2023	Sheet 48 of 77		

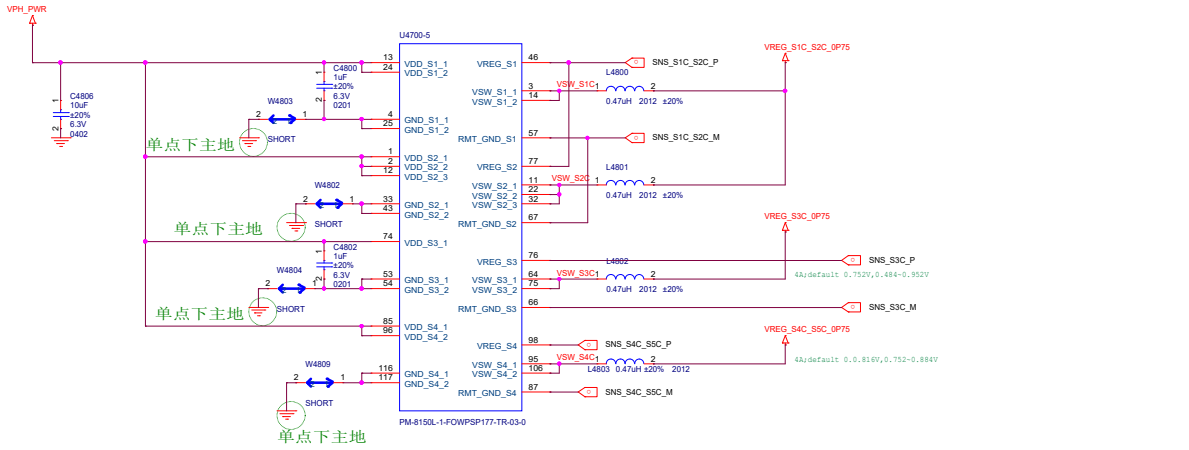

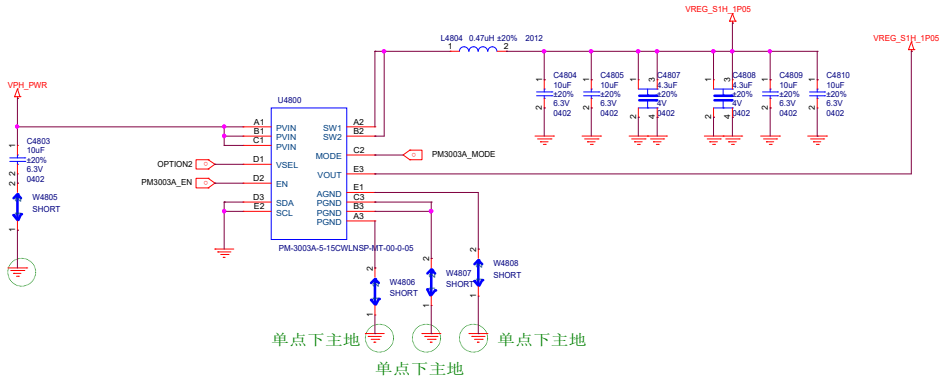

Title	K81A_TEST_BOARD
Size A3	Document Number PM855A BUCK CONVERTER1
Date: Thursday, January 12, 2023	Sheet 49 of 77

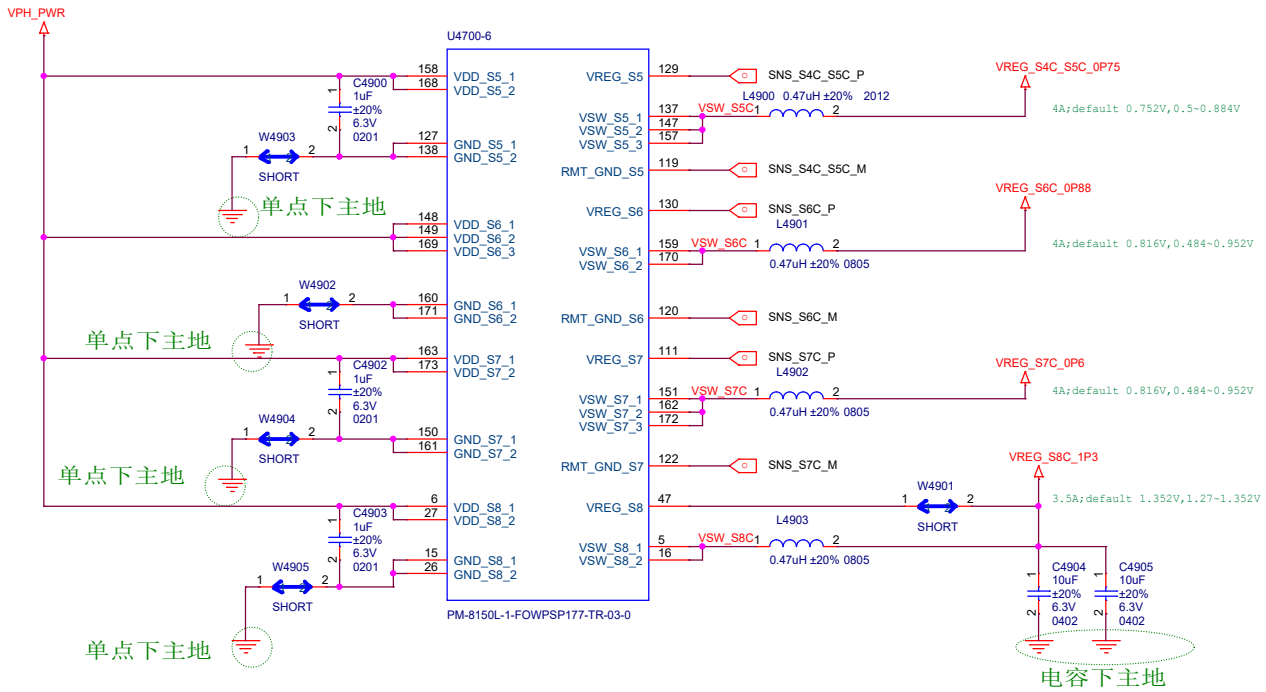

Title	K81A_TEST_BOARD
Size A4	Document Number PM855A BUCK CONVERTER2
Date: Thursday, January 12, 2023	Sheet 49 77

Make sure SCP(short circuit peotection) must be disabled

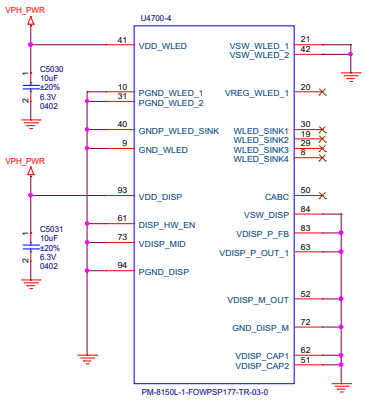

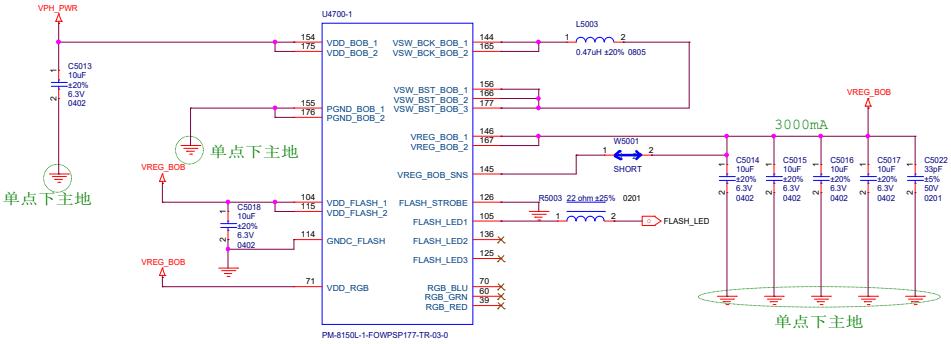

Title	K81A_TEST_BOARD
Size A3	Document Number PM855A AMOLED&BOB&FLASH
Date: Thursday, January 12, 2023	Sheet 50 77

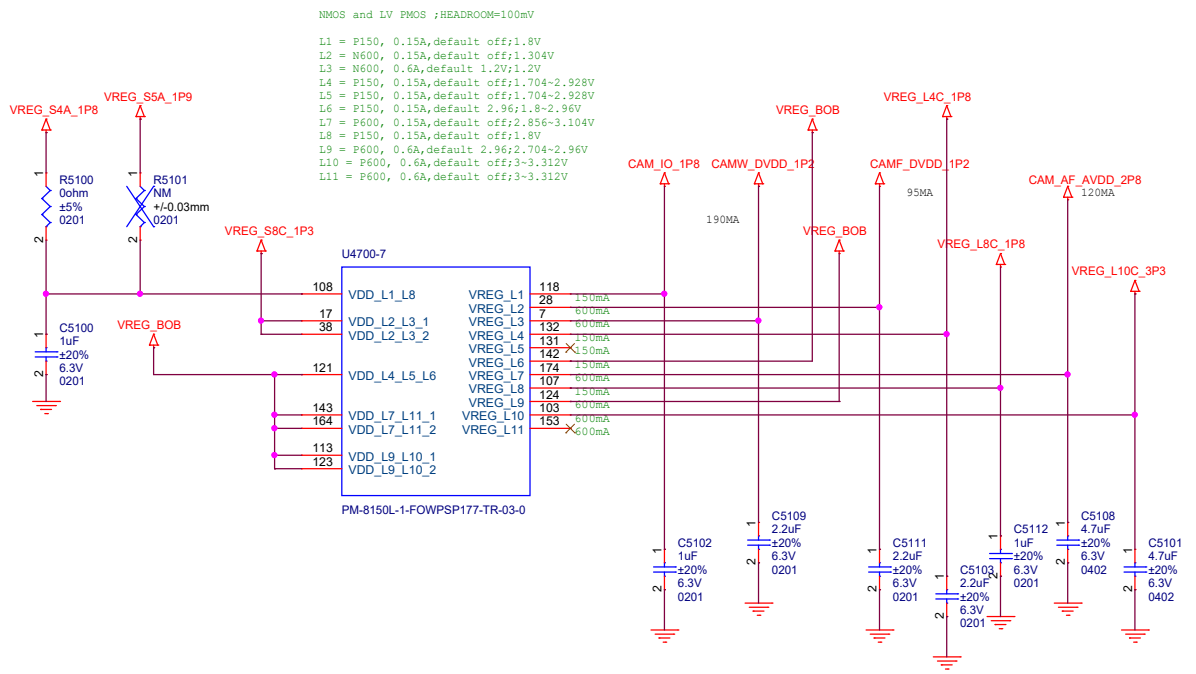

Title	K81A_TEST_BOARD
Size A4	Document Number PM855A LDOs
Date: Thursday, January 12, 2023	Sheet 51 of 77

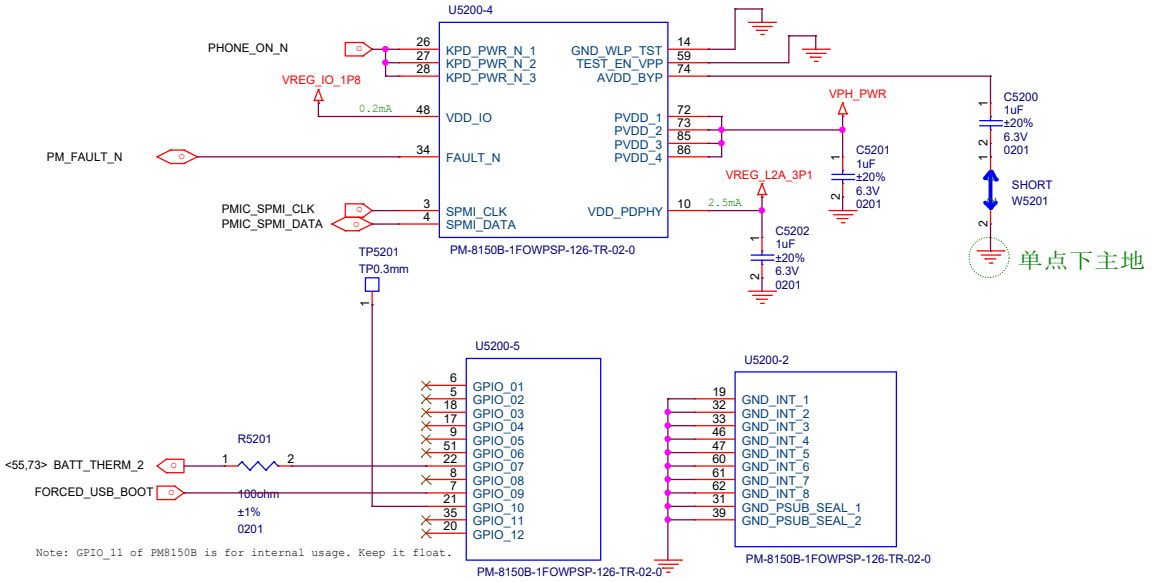

Note: GPIO_11 of PM8150B is for internal usage. Keep it float.

Note: GPIO_04 and GPIO_11 of PM8150B are for internal usage. Keep them float.
Keep GPIO_03 of PM8150B float. Don't use it for other purpose.
GPIO_06 of PM8150B is dedicated for SMB_STAT. Don't use it for other purpose.

Title	K81A_TEST_BOARD
Size A4	Document Number PM855B CTRL&GND
Date: Thursday, January 12, 2023	Sheet 53 of 77

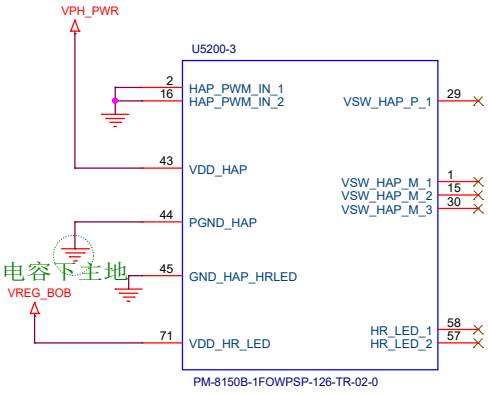

Title	K81A_TEST_BOARD		
Size A4	Document Number PM855B HAPTIC		
Date: Thursday, January 12, 2023		Sheet 54	77

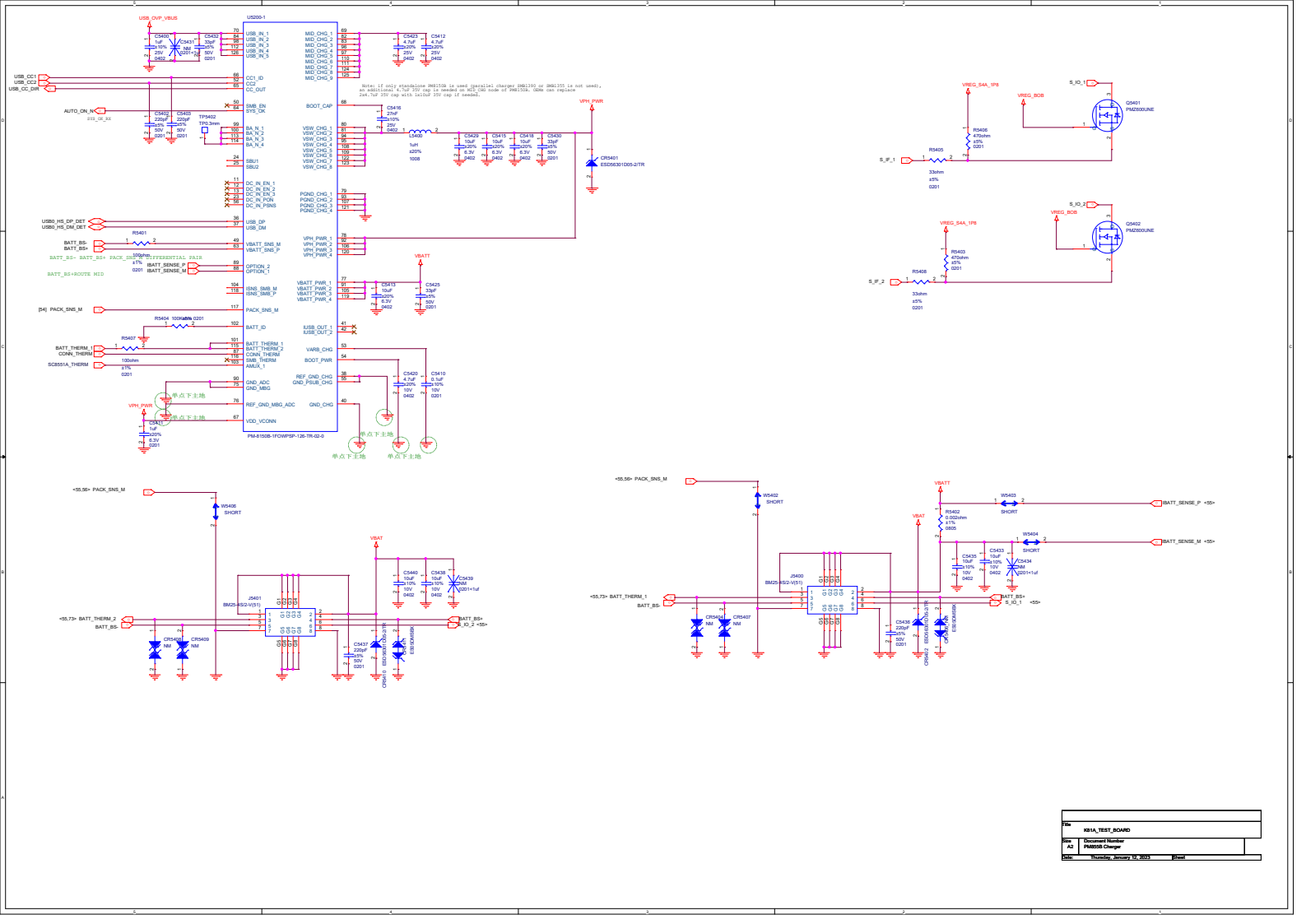

Title	K81A_TEST_BOARD
Size	Document Number
A2	PM8550 Charger
Date: Thursday, January 02, 2025	Sheet

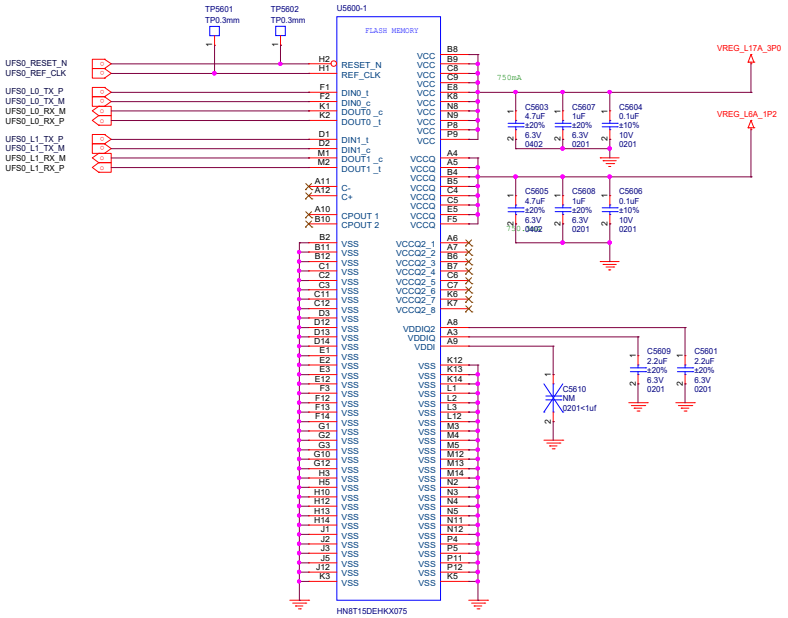

项目	配置	小米料号	P/N	供应商	描述	一供/二供	制程
K81(870)	6+128 8+256	276300000B79	KLUDG4UHDC-B0E1	Samsung	128GB UFS 3.1	First Source	V6
		276300000UJY	THGJFCT0T44BAKL	Kioxia	128GB UFS 3.0	Second Source	96L
		276300000C79	KLUEG8UHDC-B0E1	Samsung	256GB UFS 3.1	First Source	V6
		276100000H52	MT62F768M64D4BG-031 WT:A	Micron	6GB LPDDR5 for 865	First Source	1ynm
		276100000J79	K3LK7K70BM-BGCP	Samsung	8GB LPDDR5 for 875	First Source	1znm
		276100000P52	MT62F1G64D8CH-031 WT:B	Micron	8GB LPDDR5 for 875	Second Source	1znm

Title	K81A_TEST_BOARD
Size A3	Document Number MEMORY
Date: Thursday, January 12, 2023	Sheet 56 77

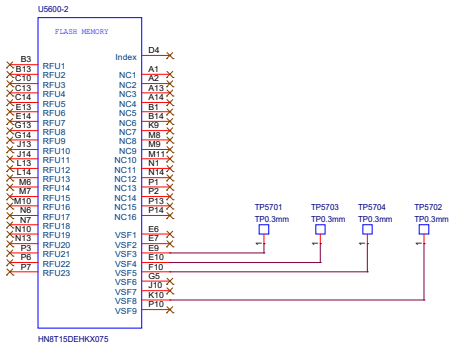

Title	K81A_TEST_BOARD
Size A3	Document Number MEMORY-2
Date: Thursday, January 12, 2023	Sheet

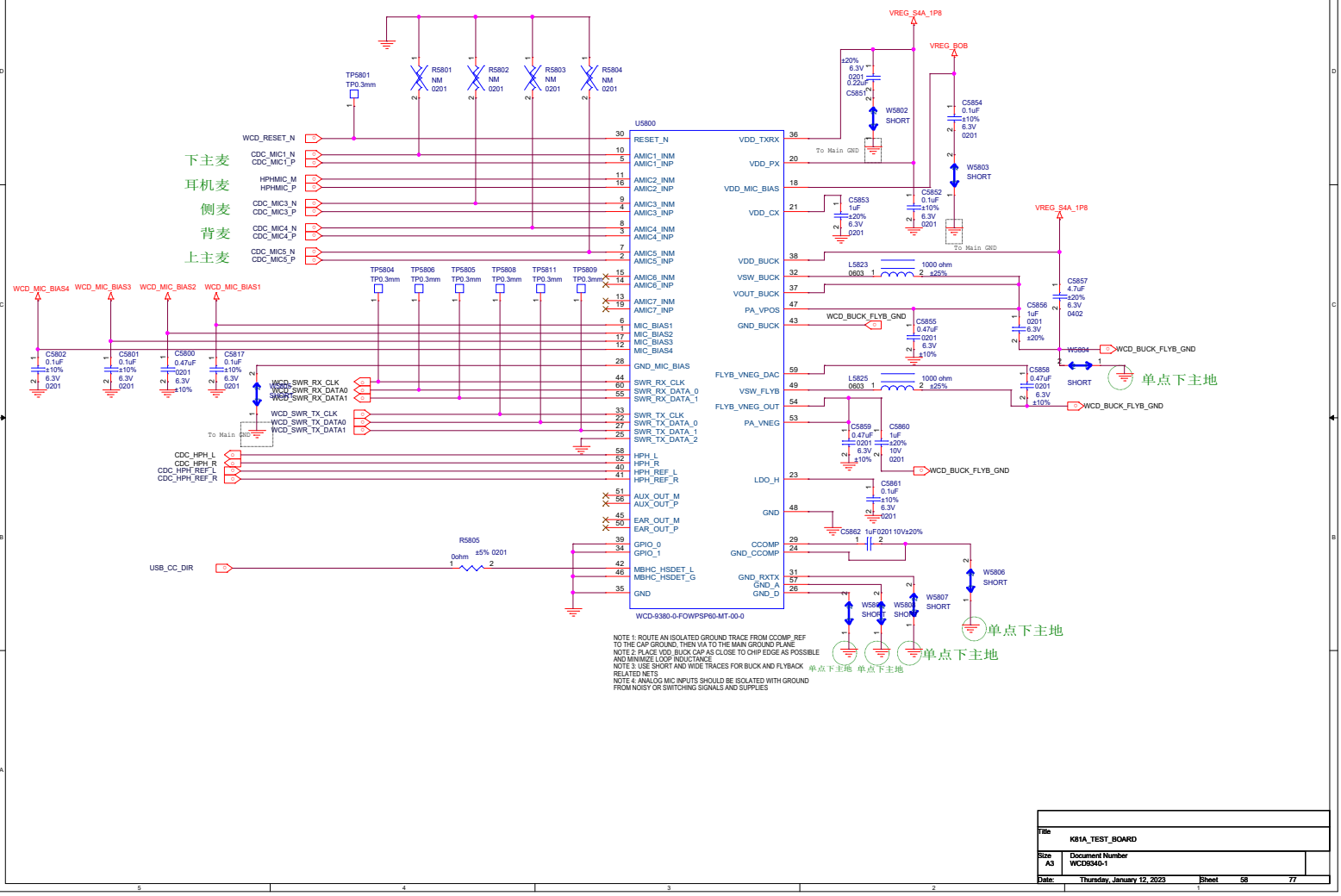

Title	K81A_TEST_BOARD		
Size A3	Document Number WCD9340-1		
Date: Thursday, January 12, 2023	Sheet 58	77	

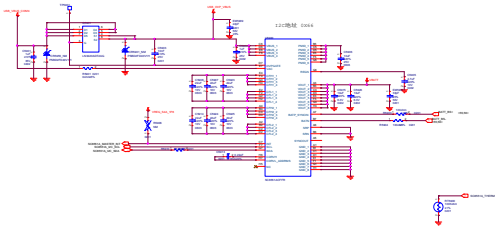

Title	MAIN_BOARD_MEMORY
Size	Document Number
A4	12C5896 C006
Date: Tuesday, October 14, 2008	Sheet 1

AUDIO SWITCH

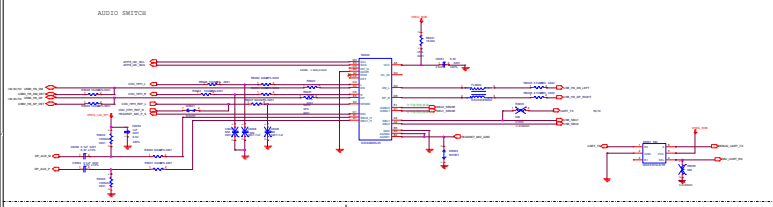

BOT-MAIN-MIC1

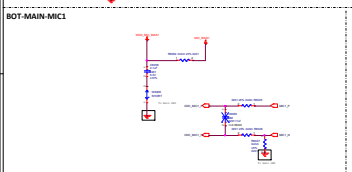

SIDE-MIC3

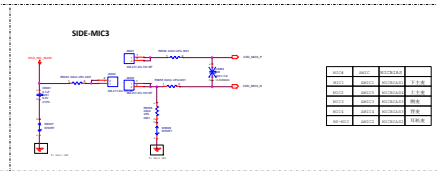

Mic14	AMIC1	MIC0&MIC8	
MIC21	AMIC2	MIC0&MIC9	下小麦
MIC22	AMIC3	MIC0&MIC10	上小麦
MIC23	AMIC4	MIC0&MIC11	侧麦
MIC24	AMIC5	MIC0&MIC12	背麦
MIC-MIC2	AMIC6	MIC0&MIC13	耳机麦

TOP-MAIN-MIC2

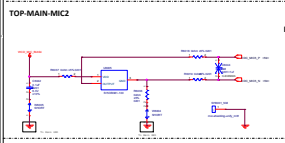

BACK-MIC4

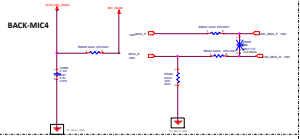

HEADSET

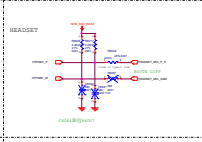

SPKR PA1

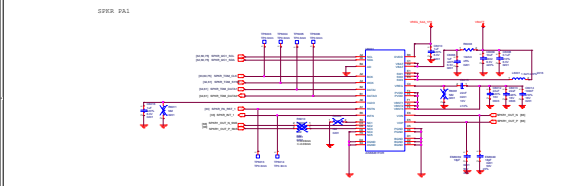

AW88263S

I2C ADD	I2C Adr	0x8040H	CPU
0	0	0x34	CPU1
1	1	0x35	CPU2
0	0	0x36	CPU3
1	1	0x37	CPU4

SPKR PA2

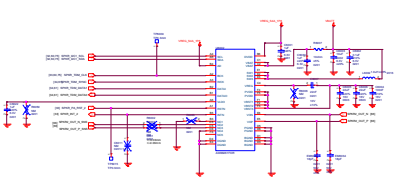

AW88261FCR

I2C ID	Address	PIN
GND	0x34	CPU1
SCLD	0x35	CPU2
SCL	0x36	CPU3
SDA	0x37	CPU4

SPKR PA3

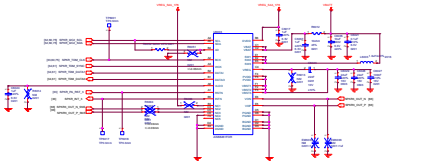

SPKR PA4

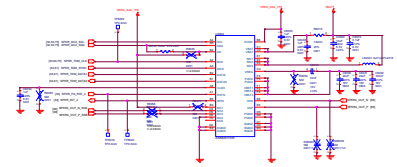

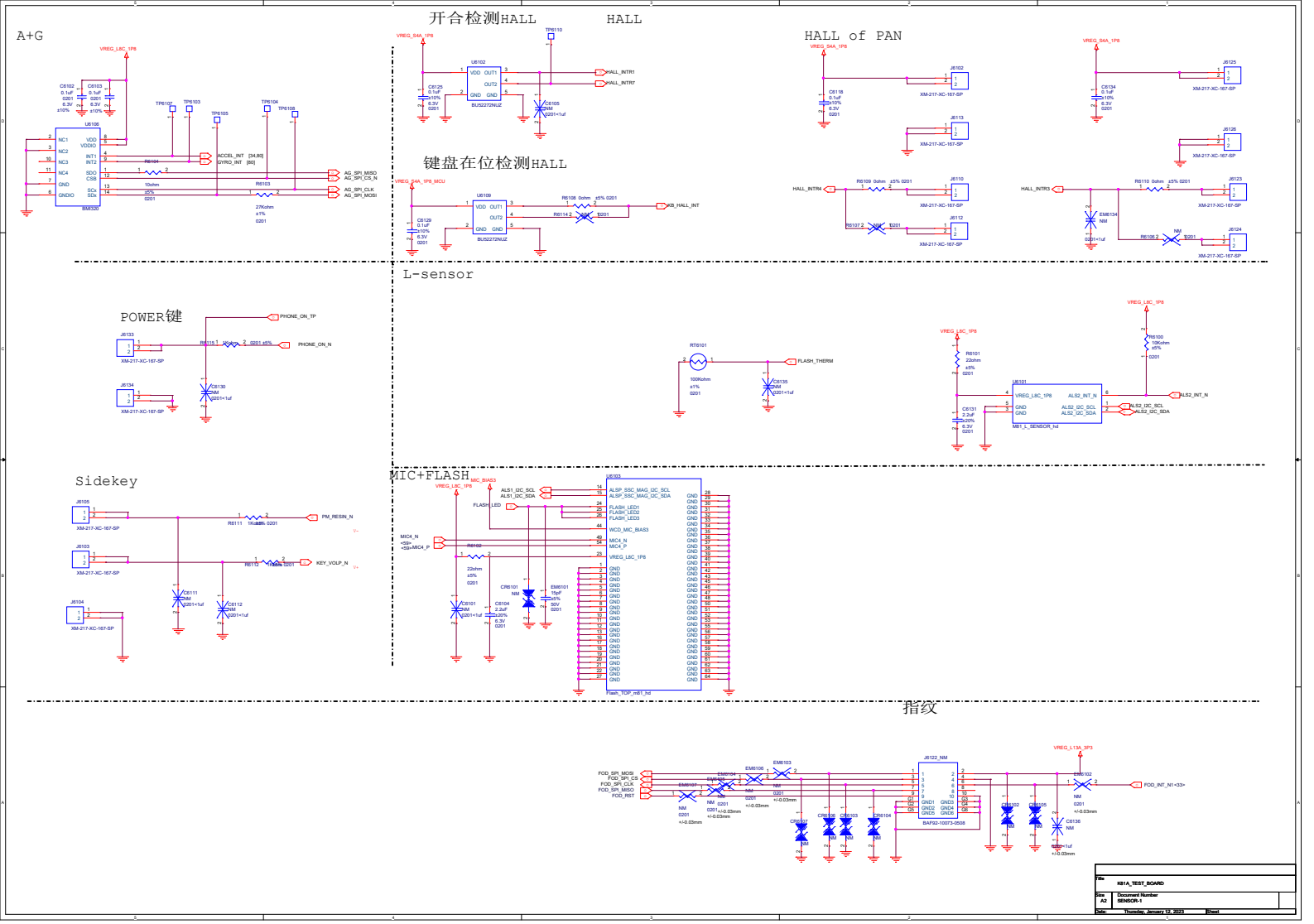
A+G
开合检测HALL
HALL
HALL of PAN
键盘在位检测HALL
POWER键
L-sensor
Sidekey
MIC+FLASH
指纹
VREG_L8C_1P8
U6106
BMI320
U6102
BUS2272NUZ
U6109
U6101
U6103
J6122_NM
BAF92-10073-0508
K81A_TEST_BOARD
SENSOR-I
Thursday, January 12, 2023

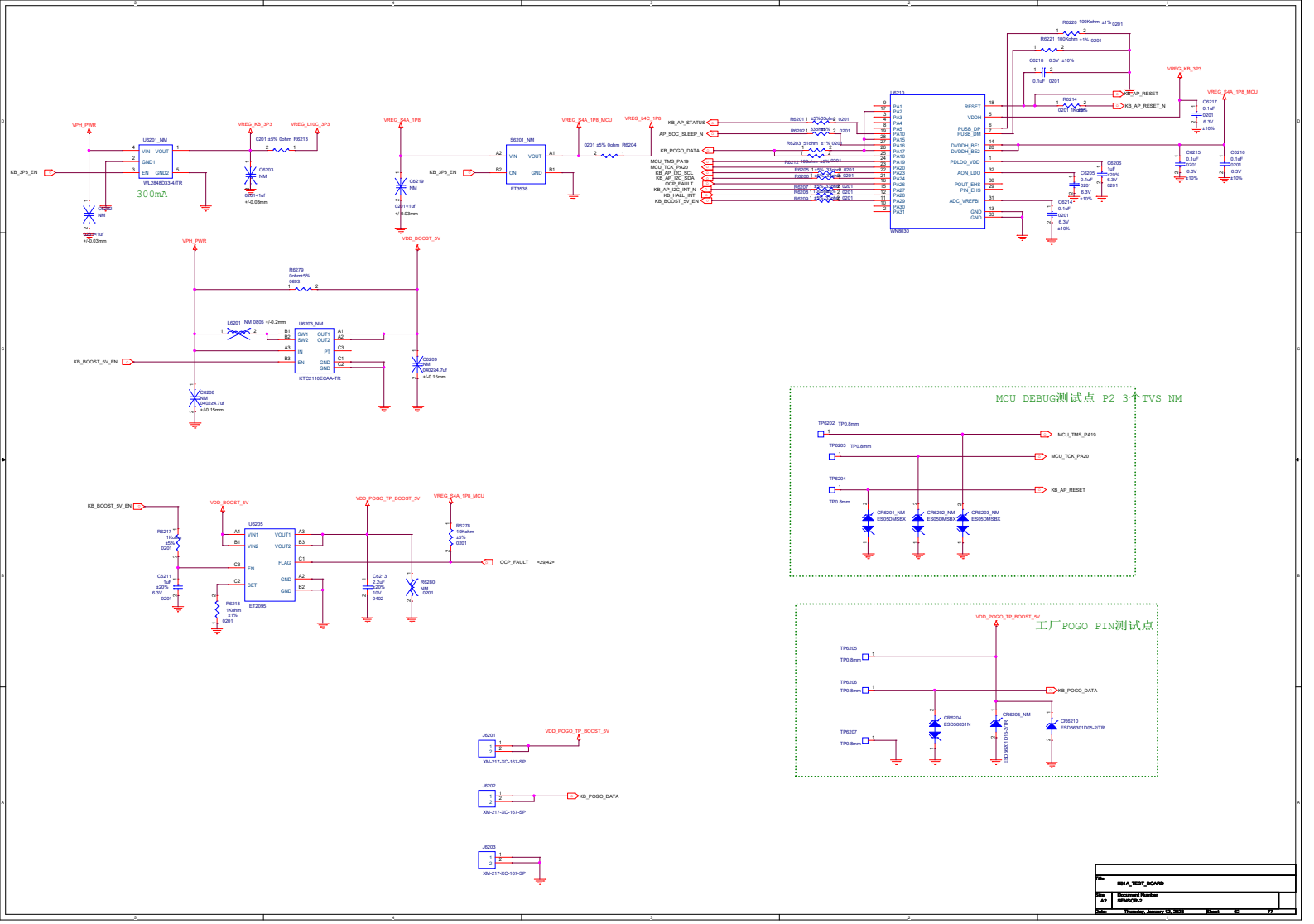

Title	KB1A_TEST_BOARD
Size A2	Document Number SB8ROK-2
Date: Thursday, January 12, 2023	Sheet 02 of 77

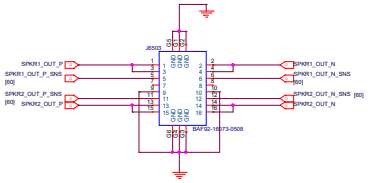

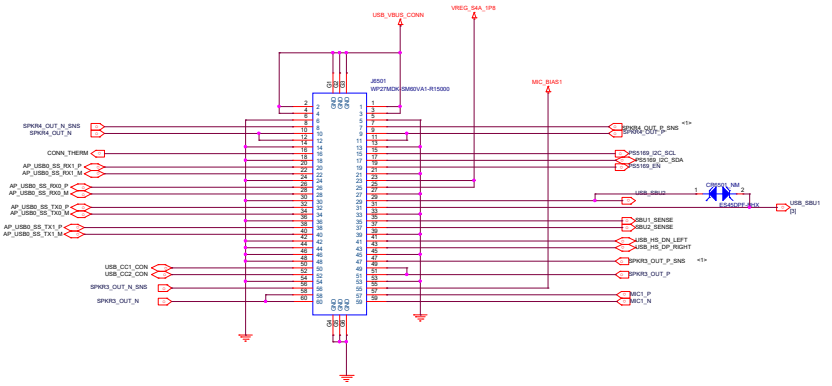

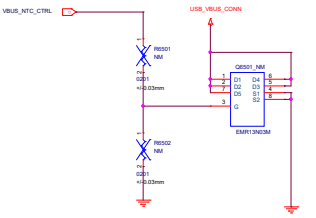

Title	K81A_TEST_BOARD
Size A2	Document Number STB
Date: Thursday, January 12, 2023	Sheet 65 of 77

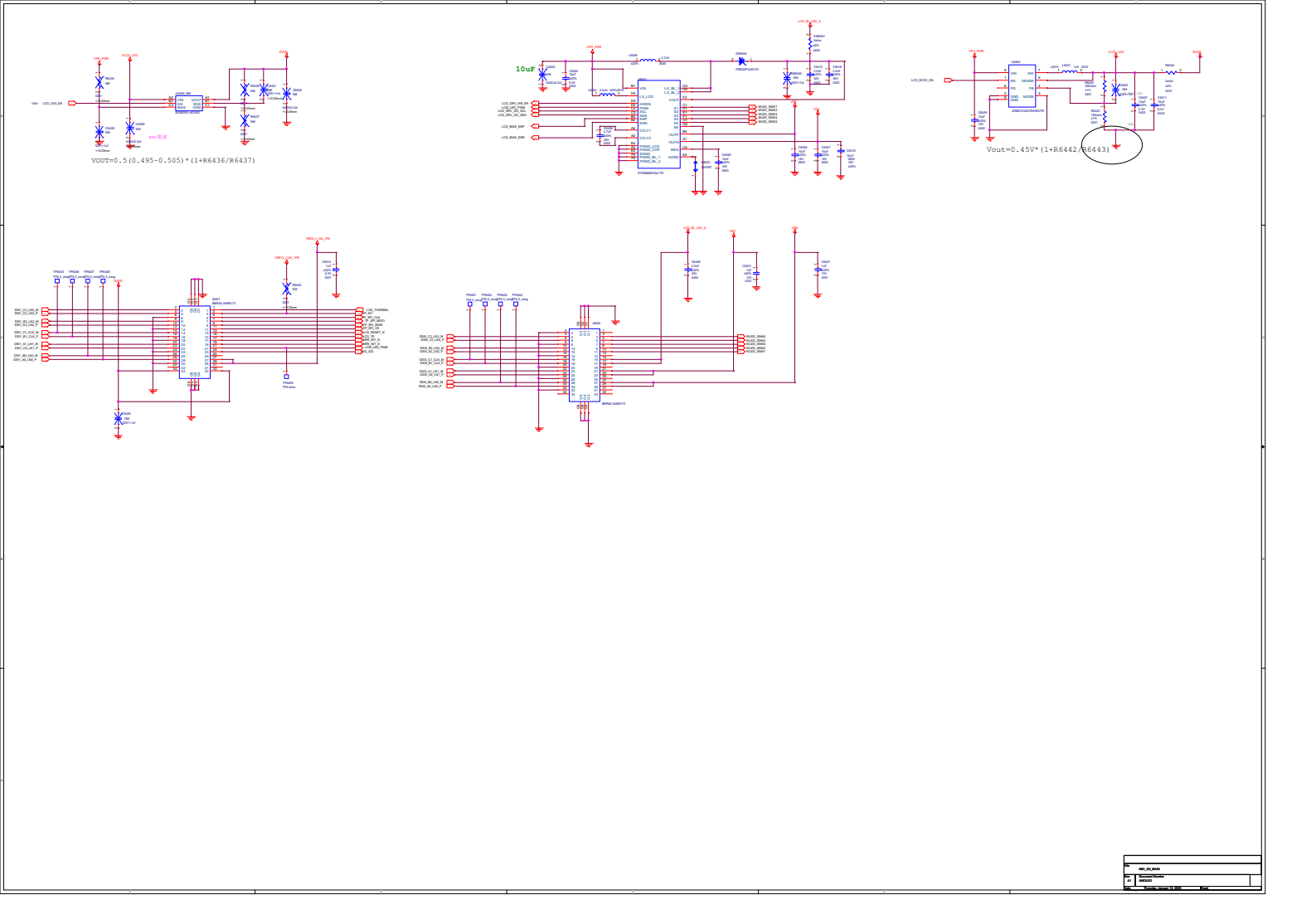

Title	MIPI_DC_MAIN
Size: A3	Document Number: 4000-0000
Date: Thursday, January 14, 2021	Sheet

WIDE 13M(OV13B10)

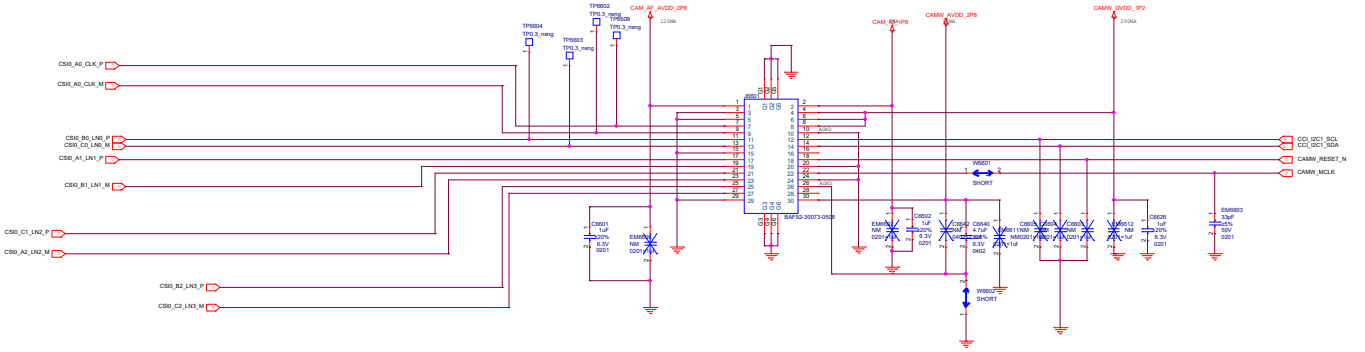

Title	M81_5G_MAIN
Size A2	Document Number WIDE CAMERA
Date: Thursday, January 12, 2023	Sheet

Front 8M （Hi846W）

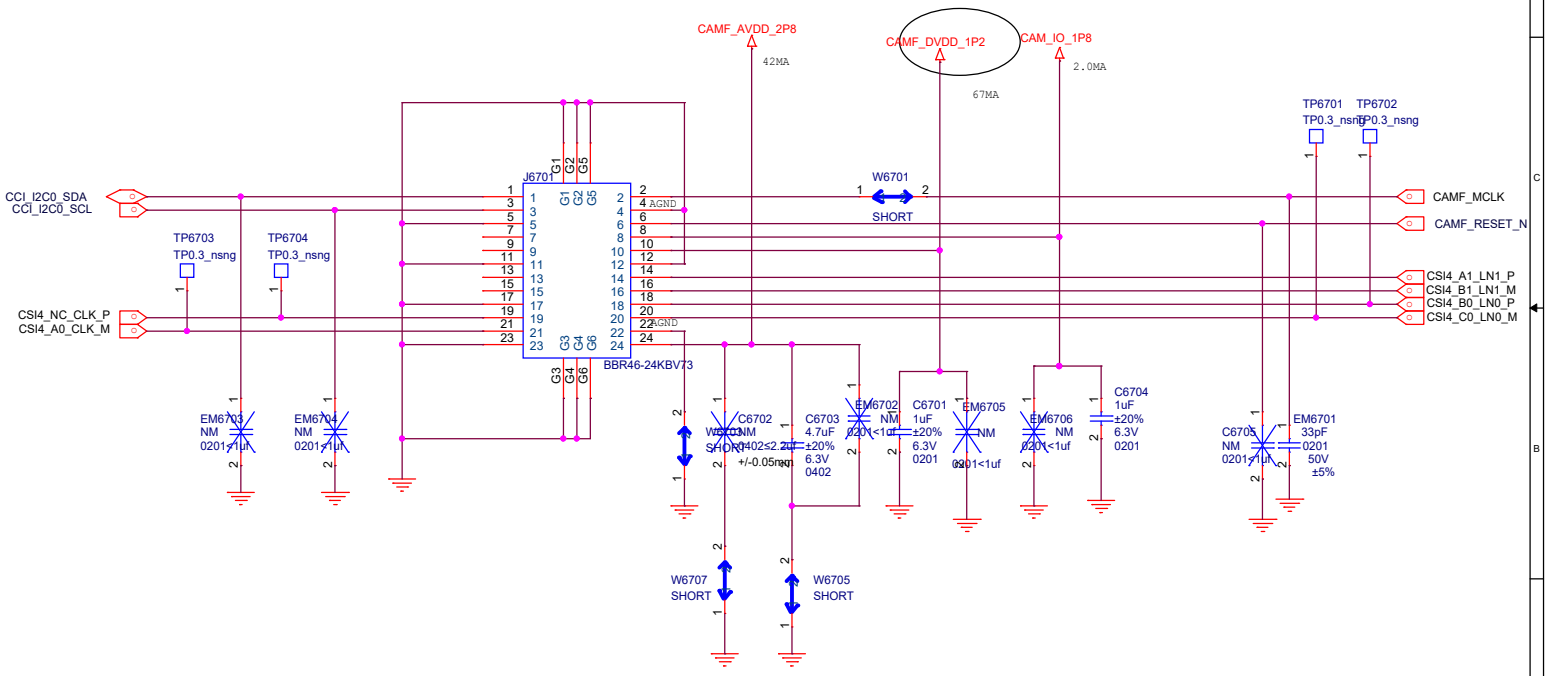

Title	L12_MAIN
Size A4	Document Number FRONT CAMERA
Date: Thursday, January 12, 2023	Sheet 68 78

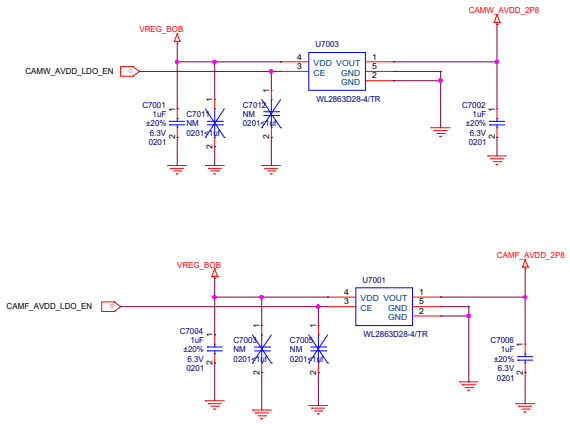

Title	M81_5G_MAIN
Size A3	Document Number CAMERA LDOs
Date: Thursday, January 12, 2023	Sheet 71

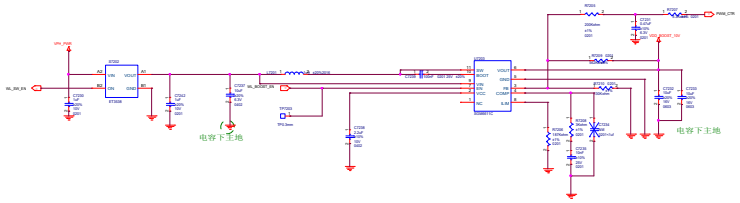

Wireless charge

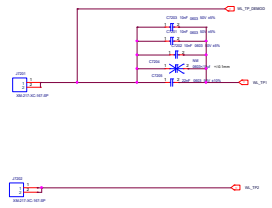

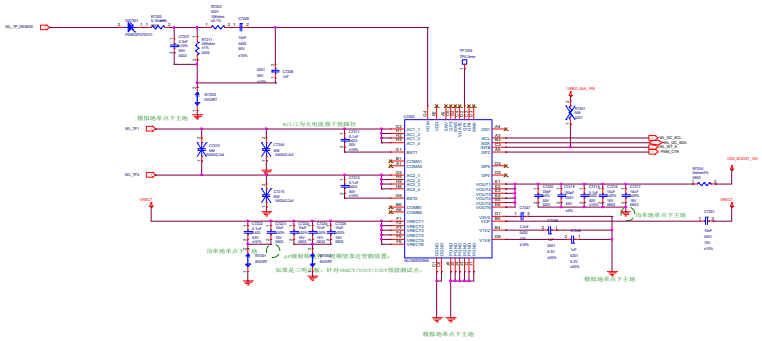

Title	SKY_BD_BRIA
Size	A4
Document Number	
Rev	0.01
Date: Tuesday, January 16, 2018	Sheet 1 of 1

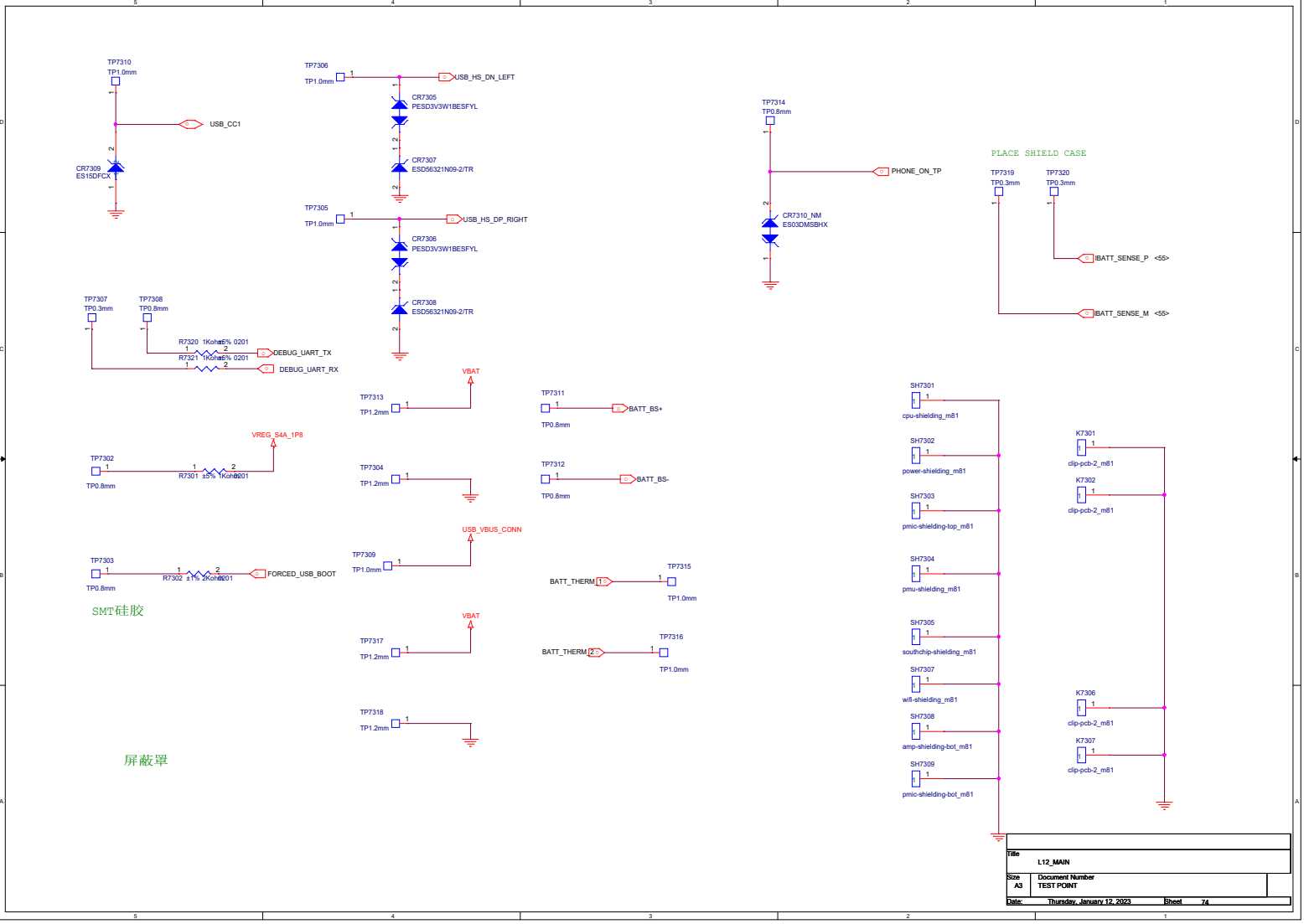

Title	L12_MAIN
Size A3	Document Number TEST POINT
Date: Thursday, January 12, 2023	Sheet 74

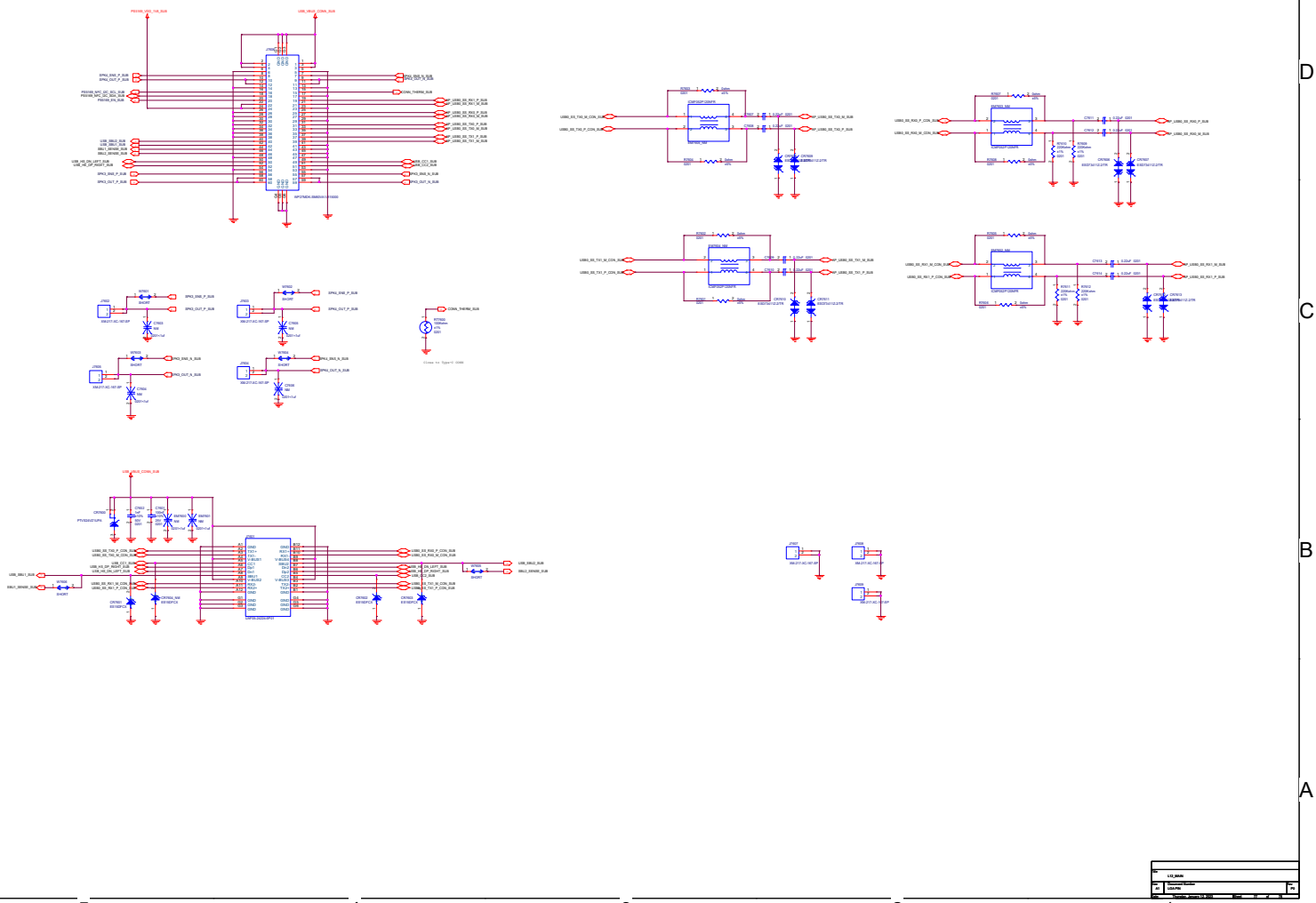

Title	LTC_SB-MB		
Size	Document Number		Rev
B	2101-PR0		PR
Date: Monday, January 13, 2020		Sheet 22 of 22	

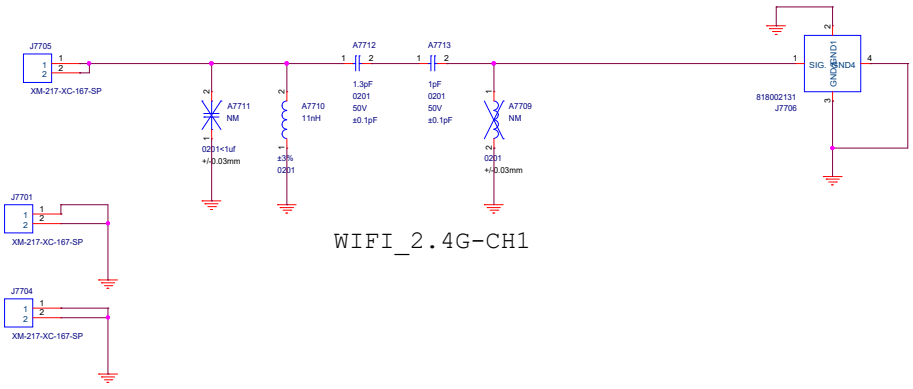

WIFI_2.4G-CH1

Title	L12_MAIN
Size A3	Document Number ANT PCB
Date: Thursday, January 12, 2023	Sheet 78 of 78